BFC MACHINE PRODUCTS

SOCKET-WELD FITTINGS, FLANGES & UNIONS

PRODUCT CATALOG

Table of Contents

Navigating This Catalog	1
Welcome Message	2
Company Background	3
Vision & Mission	4
Socket Dimensions	5
BEC Parts Reference	6
Section 1: Socket-Weld Elbows & Returns	7
90° Elbows (Standard & Reducing)	8
45° Elbows & 90° Long-Turn Elbows	9
Open & Closed Returns	10
Street Elbows & 90° Union Elbow Assemblies	11
Section 2: Socket-Weld Tees	12
Tees (Standard & Reducing)	13-16
Single-Sweep Tees & Double-Sweep Tees	17
Section 3: Socket-Weld Y-Laterals & Crosses	18
Y-Laterals	19
Crosses	20
Section 4: Socket-Weld Bushings & Couplings	21

Table of Contents

Reducing Bushings 22

Couplings (Standard & Reducing) 23

Section 5: Socket-Weld Adapters, Caps & Plugs 24

NPT Adapters (Male & Female) 25

Caps & Plugs 26

Section 6: Socket-Weld Union Assemblies, Threadpieces & Tailpieces 27

Union Assembly, Tailpieces & Threadpieces 28

Section 7: Socket-Weld Flanges 29

Class 150 SW Navy Flanges 30

Class 150 Navy Slip-on Flanges 31

Class 200 SW Navy Flanges 32

Class 250 SW Navy Flanges 33

Class 400 FFW Navy Flanges 34

Section 8: Cross-Reference Index 35

Fittings 36

Flanges 37

Flanges 38

Navigating This Catalog

Pricing & Availability

If you have any questions regarding the pricing and availability of our products, we encourage you to contact our sales department. Our team is always happy to assist with any inquiries you may have, and can provide you with up-to-date information on pricing, lead times, and other relevant details. Please don't hesitate to reach out to us via phone or email to discuss your needs and get the information you need to make informed purchasing decisions (becmac@becmachine.com).

Dimensions

Please note that the dimensions provided in our product catalog are approximate and subject to change. If you require exact dimensions for a specific product, we recommend that you contact our engineering department. Our team can provide you with the most current and accurate information on the dimensions of our products, as well as any other technical specifications that you may require. We're here to help you make informed purchasing decisions and find the right products for your needs, so please don't hesitate to contact us with any questions or concerns you may have.

Accuracy of Information

As a company, we strive to ensure the accuracy of information in our product catalog, and have taken the necessary steps to verify the technical specifications and other details provided. However, we cannot guarantee that the information in our catalog is completely error-free or up-to-date at all times. As such, we cannot be held liable for any inaccuracies or errors in our catalog. We encourage customers to verify any information in our catalog and to contact us if any questions or concerns arise.

Welcome Message

Welcome to BEC Machine Products, where we specialize in manufacturing top-quality fittings for naval vessels. We take great pride in providing reliable and durable products that meet the high standards of the naval defense industry. Our team of experts is committed to delivering innovative solutions to enhance the efficiency and effectiveness of your naval operations. With years of experience in the industry, we have gained a reputation for excellence and are trusted by naval forces around the world. We look forward to working with you and providing the best possible solutions for your naval needs. Thank you for choosing our company.

Company Background

For more than 40 years, BEC Machine Products has produced precision machine parts for military systems, water filtration, and numerous commercial industrial applications. We are an internationally known company that takes pride in filling orders for the U.S. Department of Defense and for many private industry customers. Our parts are installed on a series of naval vessels, including submarines, carriers, and surface ships.

Our technical staff has more than 100 years of experience. Therefore, we can manufacture directly to your requirements or design a new product to meet your needs. In addition to our established product line, we have a library of more than 25,000 drawings. Moreover, we ship anywhere in the world and can provide emergency or rush service.

At BEC Machine Products, we average a 4-to-1 quality ratio for machinist to quality personnel. This approach, coupled with the availability for on-site customer joint inspection, assures that our clients' quality needs are maintained.

Our experience, our commitment to excellence, and our outstanding customer service make us the right choice for any business, public or private, large or small.

Facilities

Manufacturing is performed at our state-of-the-art Harleysville facility that is located 35 miles northwest of Philadelphia. Centrally located in Northeastern United States, we have access to some of the largest inventories of raw material for quick response and service for our customers. Utilizing the latest in CAD/CAM software for both design and manufacturing, assures precision from design to assembly. Shop floor control from purchase to billing is maintained by the most powerful and comprehensive ERP software available today.

BEC Machine Products takes pride in being an American manufacturer that uses American-made software systems and machines to support the men and women who are defending our country around the world.

Vision & Mission

Vision

Our vision at BEC Machine Products is to be the leading provider of high-quality valves and fittings for the U.S. Navy. We are committed to delivering the most advanced and reliable products that meet the rigorous standards of the U.S. Navy, ensuring the safety and reliability of their operations at sea. Our team of experts is dedicated to continuous innovation and improvement, leveraging the latest technologies and materials to develop products that exceed our customers' expectations. With a relentless focus on quality, safety, and customer satisfaction, we strive to be the trusted partner of choice for the U.S. Navy and a leader in the industry.

Mission

At BEC Machine Products, we are committed to providing high-quality valves and fittings for both the U.S. Navy and commercial enterprises. Our mission is to deliver reliable, efficient, and safe products that meet and exceed our customers' expectations, while also ensuring that they comply with all relevant specifications and industry standards.

We understand that our products play a critical role in the safety and effectiveness of our customers' operations, which is why we prioritize excellence in every aspect of our business, from product design and development to manufacturing and customer service. We believe in fostering a culture of continuous improvement, always striving to innovate and optimize our products and processes to better serve our customers.

Above all, we are dedicated to building strong, long-term relationships with our customers based on trust, transparency, and mutual respect. We believe that by working together, we can achieve great things and contribute to the success of our customers and the industries they serve.

Socket Dimensions

SIZE	DEPTH OF SOCKET	METAL THICKNESS OVER SOCKET DIAMETER		BODY METAL THICKNESS	DIAMETER OF SOCKET		INSIDE DIAMETER		RADIUS	WIDTH OF BAND	BAND DIAMETER
	MIN	MIN	AVG. MAX	MIN					MIN	MIN	AVG. MAX
1/4	17/64	.130	.200	.070	.545	±.030	.398	±.015	5/64	9/32	.945
3/8	5/16	.130	.208	.080	.680	±.030	.532	±.015	3/32	21/64	1.096
1/2	3/8	.130	.215	.080	.845	±.030	.697	±.020	3/32	25/64	1.275
3/4	13/32	.130	.224	.090	1.055	±.030	.907	±.025	7/64	27/64	1.503
1	7/16	.130	.230	.100	1.320	±.030	1.171	±.025	7/64	15/32	1.780
1-1/4	1/2	.144	.232	.110	1.665	±.030	1.502	±.030	1/8	17/32	2.129
1-1/2	5/8	.144	.241	.120	1.905	±.030	1.742	±.030	1/8	21/32	2.387
2	21/32	.166	.264	.140	2.380	±.046	2.186	±.030	5/32	11/16	2.908
2-1/2	25/32	.166	.264	.150	2.880	±.051	2.686	±.030	5/32	13/16	3.408
3	53/64	.190	.268	.170	3.505	±.055	3.286	±.035	3/16	55/64	4.041
3-1/2	7/8	.190	.268	.180	4.005	±.055	3.786	±.035	3/16	29/32	4.541
4	29/32	.218	.296	.200	4.505	±.060	4.252	±.040	7/32	15/16	5.097
5	1	.280	.350	.280	5.568	±.060	5.278	±.040	5/16	1-1/32	6.268
6	1-7/64	.320	.390	.320	6.630	±.060	6.321	±.040	11/32	1-9/64	7.410
8	1-5/16	.380	.450	.380	8.630	±.060	8.286	±.040	13/32	1-23/64	9.530
10	1-1/2	.455	.525	.455	10.755	±.060	10.325	±.040	1/2	1-9/16	11.805
12	1-5/8	.540	.615	.540	12.755	±.060	12.322	±.040	9/16	1-11/16	13.985

SERVICE RATING TABLE				
	STEAM SERVICE		AIR, OIL, WATER SERVICE	
NOMINAL PIPE SIZE (INCHES)	MAXIMUM WORKING PRESSURE (LB/IN2)	MAXIMUM TEMPERATURE (°F)	MAXIMUM WORKING PRESSURE (LB/IN2)	MAXIMUM TEMPERATURE (°F)
1/4-6	200	425	400	150
ABOVE 6	150	425	250	150

COPPER-NICKEL MATERIAL SPECIFICATIONS			
	GRADE	UNS No.	SPECIFICATION
CASTING	90-10 (FV)	C96200	ASTM B369
	70-30 (FU)	C96400	
BAR STOCK	90-10 (FJ)	C70600	MIL-C-24679 or MIL-C-15726
	70-30 (FI)	C71500	

BEC Parts Reference

In order to ensure quality customer service, we have simplified the ordering process by providing a breakdown of our part identification system.

Our system consists of four components, with the first directly corresponding to our drawings. Each part number begins with the last three digits of the drawing linked to a given socket-weld fitting or flange. These digits serve as the base identifying feature for all of our part numbers, providing a solid foundation for easy reference. The second component is tied to the part type and is represented by a letter or series of letters as an abbreviation.

To further enhance clarity and in keeping with industry standards, the third component pertains to size and is displayed in digit form based on our standardized part numbering system. The final component to our part identification system corresponds with the material designation code by which a particular socket-weld fitting or flange is made from.

DRAWING # 803-6397430	430T-1-FV

KEY

430 = I.A.W. 803-6397430
T = Type of Fitting
1 = Size
FV = Material Type

***Also available in (NPT) configurations**

AY	*UNION ASSY.
B	BUSHING
C	*COUPLING
CA	*CAP
DST	DOUBLE-SWEEP TEE
FA	*NPT (F) ADAPTER
FL	*45 DEG. ELBOW
L	*90 DEG. ELBOW
LA	Y-LATERAL
LTL	*LONG-TURN ELBOW
MA	*NPT (M) ADAPTER
R	180 RETURN
RC	CLOSED RETURN
SL	*STREET ELBOW
SST	SINGLE-SWEEP TEE
T	*TEE
TH	*THREADPIECE
TL	*TAILPIECE
UL	*UNION ELBOW ASSY.
X	CROSS

1	1/4
2	3/8
3	1/2
4	3/4
5	1
6	1-1/4
7	1-1/2
8	2
9	2-1/2
10	3
11	3-1/2
12	4
13	5
14	6
15	8
16	10

FV	90/10 (ASTM B369, C96200)
FU	70/30 (ASTM B369, C96400)
FJ	90/10 (MIL-C-15726, C70600)
FI	70/30 (MIL-C-15726, C71500)
GZ	90/10 (MIL-C-24679, C71500)
GB	70/30 (MIL-C-24679, C71500)

Section 1

Elbows & Returns

How to Order:
90/10 (B369) + -FV
70/30 (B369) + -FU

Elbows are important components in the naval defense industry as they play a critical role in the design and operation of piping systems on surface ships and submarines. Different types of elbows, including street, 45°, 90°, and returns, serve specific purposes in naval applications.

Street elbows, for example, are used to change the direction of a pipe at a right angle while maintaining the same pipe size. This can be useful in tight spaces or when clearance is limited. Street elbows are commonly used in bilge and drainage systems on naval vessels.

45° and 90° elbows are used to change the direction of fluid flow by 45 or 90 degrees, respectively. These types of elbows are used in a variety of applications in naval vessels, including piping for fuel, water, and other fluids. The choice between a 45° and a 90 ° elbow will depend on the specific requirements of the system, including flow rate and pressure.

Returns, also known as u-turns or hairpin bends, are used to change the direction of flow in a piping system by 180°. These are used in systems that require the fluid to flow back in the opposite direction, such as in cooling systems.

The significance of long-turn elbows in the naval defense industry lies in their ability to ensure the safe and efficient operation of critical systems on board ships and submarines. By choosing the right type of elbow for a given application, naval engineers can help ensure that the piping system functions reliably, even under extreme conditions. Additionally, proper installation and maintenance of elbows is essential to prevent leaks and other issues that can compromise the safety and performance of naval vessels.

90° Elbows

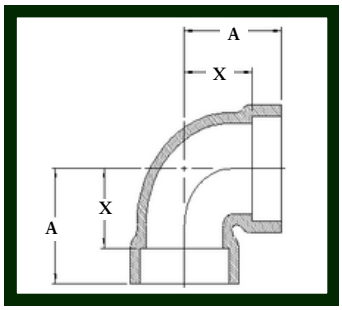

Also Available
430L1T = SW x (F)NPT
430L2T = (F)NPT x (F)NPT

PART #	SIZE	A	X
430L-1	1/4	45/64	7/16
430L-2	3/8	13/16	1/2
430L-3	1/2	1-1/64	41/64
430L-4	3/4	1-3/16	25/32
430L-5	1	1-7/16	1
430L-6	1-1/4	1-11/16	1-3/16
430L-7	1-1/2	1-27/32	1-7/32
430L-8	2	2-1/8	1-15/32
430L-9	2-1/2	2-45/64	1-59/64
430L-10	3	3-5/64	2-1/4
430L-11	3-1/2	3-27/64	2-35/64
430L-12	4	3-51/64	2-57/64
430L-13	5	4-1/2	3-1/2
430L-14	6	5-1/8	4-1/64

ALL DIMENSIONS ARE IN INCHES AND IN ACCORDANCE WITH THE 803-6397430 DRAWING

Reducing 90° Elbows

Custom and reducing sizes are available upon request.

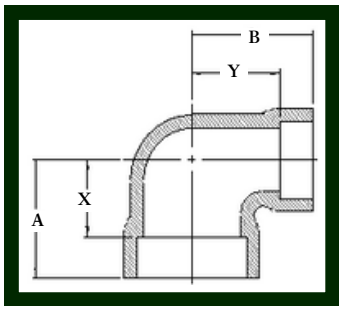

Also Available
430L1T = SW x (F)NPT
430L2T = (F)NPT x (F)NPT

PART #	SIZE	A	X	B	Y
430L-2-1	3/8 x 1/4	3/4	7/16	25/32	33/64
430L-4-3	3/4 x 1/2	1-3/32	11/16	1-1/8	3/4
430L-5-3	1 x 1/2	1-3/16	3/4	1-1/4	7/8
430L-5-4	1 x 3/4	1-19/64	55/64	1-5/16	29/32
430L-6-5	1-1/4 x 1	1-33/64	1-1/64	1-19/32	1-5/32
430L-7-3	1-1/2 x 1/2	1-13/32	23/32	1-21/32	1-9/32
430L-7-5	1-1/2 x 1	1-9/16	15/16	1-23/32	1-9/32
430L-7-6	1-1/2 x 1-1/4	1-23/32	1-3/32	1-13/16	1-5/16
430L-8-7	2 x 1-1/2	2-1/16	1-7/16	1-57/64	1-15/64
430L-9-7	2-1/2 x 1-1/2	2-5/32	1-3/8	2-29/64	1-53/64
430L-9-8	2-1/2 x 2	2-25/64	1-39/64	2-19/32	1-15/16
430L-10-9	3 x 2-1/2	2-13/16	1-63/64	3-1/64	2-15/64
430L-12-8	4 x 2	2-47/64	1-53/64	3-13/32	2-3/4
430L-12-10	4 x 3	3-19/64	2-25/64	3-19/32	2-49/64

ALL DIMENSIONS ARE IN INCHES AND IN ACCORDANCE WITH THE 803-6397430 DRAWING

45° Elbows

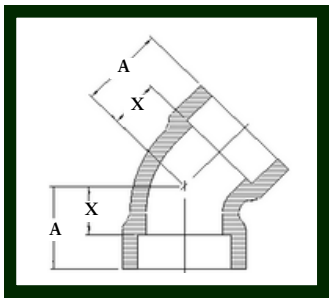

Also Available
430FL1T = SW x (F)NPT
430FL2T = (F)NPT x (F)NPT

PART #	SIZE	A	X
430FL-1	1/4	9/16	19/64
430FL-2	3/8	5/8	5/16
430FL-3	1/2	25/32	13/32
430FL-4	3/4	57/64	31/64
430FL-5	1	1-1/16	5/8
430FL-6	1-1/4	1-7/32	23/32
430FL-7	1-1/2	1-19/64	11/16
430FL-8	2	1-29/64	25/32
430FL-9	2-1/2	1-61/64	1-11/64
430FL-10	3	2-11/64	1-11/32
430FL-11	3-1/2	2-25/64	1-33/64
430FL-12	4	2-39/64	1-45/64
430FL-13	5	3-3/64	2-3/64

ALL DIMENSIONS ARE IN INCHES AND IN ACCORDANCE WITH THE 803-6397430 DRAWING

90° Long-Turn Elbows

Custom and reducing sizes are available upon request.

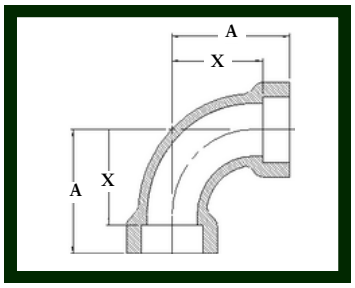

Also Available
430LTL1T = SW x (F)NPT
430LTL2T = (F)NPT x (F)NPT

PART #	SIZE	A	X
430LTL-1	1/4	1-1/4	63/64
430LTL-2	3/8	1-1/2	1-3/16
430LTL-3	1/2	1-3/4	1-3/8
430LTL-4	3/4	2	1-19/32
430LTL-5	1	2-5/16	1-7/8
430LTL-6	1-1/4	2-3/4	2-1/4
430LTL-7	1-1/2	3-1/8	2-1/2
430LTL-8	2	3-3/4	3-3/32
430LTL-9	2-1/2	4-1/2	3-23/32
430LTL-10	3	5-7/16	4-39/64
430LTL-11	3-1/2	6-3/16	5-5/16
430LTL-12	4	6-15/16	6-1/32
430LTL-13	5	8-1/8	7-1/8
430LTL-14	6	9	7-57/64

ALL DIMENSIONS ARE IN INCHES AND IN ACCORDANCE WITH THE 803-6397430 DRAWING

Open Returns

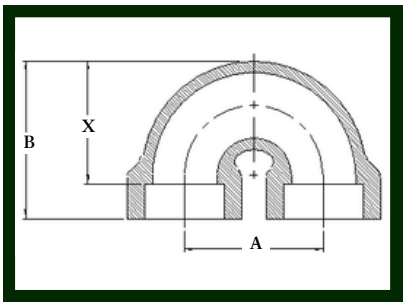

Custom and reducing sizes are available upon request.

PART #	SIZE	A	X	B
430R-3	1/2	1-1/2	1-5/16	1-11/16
430R-5	1	2-1/2	2-3/16	2-5/8
430R-6	1-1/4	3	2-5/8	3-1/8
430R-7	1-1/2	3-1/2	2-15/16	3-9/16
430R-8	2	4	3-17/32	4-3/16

ALL DIMENSIONS ARE IN INCHES AND IN ACCORDANCE WITH THE 803-6397430 DRAWING

Closed Returns

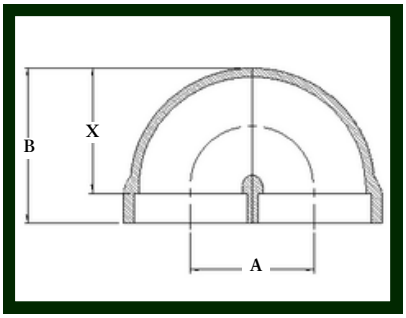

Custom and reducing sizes are available upon request.

PART #	SIZE	A	X	B
430RC-4	3/4	1-1/4	1-13/32	1-3/4
430RC-5	1	1-1/2	1-11/16	2-1/8
430RC-7	1-1/2	2-3/16	2-5/16	2-15/16

ALL DIMENSIONS ARE IN INCHES AND IN ACCORDANCE WITH THE 803-6397430 DRAWING

Street Elbows

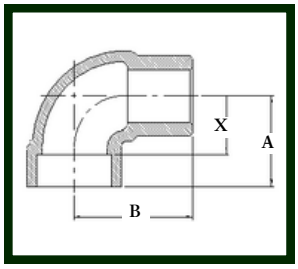

Also available: SW x (M) NPT 430SL1T-

Custom and reducing sizes are available upon request.

PART #	SIZE	A	X	B
430SL-1	1/4	13/16	35/64	1-3/16
430SL-2	3/8	15/16	5/8	1-9/32
430SL-3	1/2	1	5/8	1-15/32
430SL-4	3/4	1-3/16	25/32	1-21/32
430SL-7	1-1/2	1-27/32	1-7/32	2-15/32

ALL DIMENSIONS ARE IN INCHES AND IN ACCORDANCE WITH THE 803-6397430 DRAWING

90° Union Elbow Assemblies

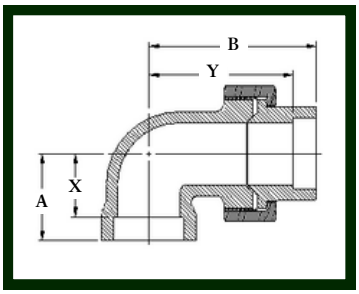

Custom and reducing sizes are available upon request.

PART #	SIZE	A	X	B	Y
430UL-1	1/4	15/16	43/64	1-63/64	1-23/32
430UL-2	3/8	1-1/16	3/4	2-17/64	1-61/64
430UL-3	1/2	1-1/4	7/8	2-15/32	2-3/32
430UL-4	3/4	1-7/16	1-1/32	2-59/64	2-33/64
430UL-5	1	1-5/8	1-3/16	3-7/32	2-25/32

ALL DIMENSIONS ARE IN INCHES AND IN ACCORDANCE WITH THE 803-6397430 DRAWING

Section 2

Tees

How to Order:
90/10 (B369) + -FV
70/30 (B369) + -FU

Socket-weld single and double-sweep tees are commonly used in piping systems to facilitate the directional flow of fluids. The purpose of these fittings is to provide a branch connection to a main pipe while maintaining the same or smaller diameter of the main pipe.

A socket-weld single-sweep tee is designed to have a single smooth curve that connects the branch to the main pipe. This type of tee is used when the flow direction needs to be redirected by 45 or 90 degrees, without causing significant turbulence or pressure drop. Single-sweep tees are also useful in applications where the fluid needs to be diverted to a different process line.

A socket-weld double-sweep tee, on the other hand, has two smooth curves that connect the branch to the main pipe. This design is useful in applications where there is a need to change the flow direction by 180° while minimizing turbulence and pressure drop. Double-sweep tees are commonly used in piping systems that require frequent cleaning or maintenance, as they provide easier access to the branch line.

The significance of socket-weld single and double-sweep tees lies in their ability to improve the efficiency and functionality of piping systems. By providing a smooth and efficient flow path, these fittings minimize pressure drop, reduce the risk of fluid stagnation, and ensure proper fluid mixing. They also provide a reliable and durable connection that can withstand high-pressure and high-temperature environments.

Overall, socket-weld single and double-sweep tees are essential components in a wide range of piping systems and are valued for their ability to facilitate fluid flow while minimizing turbulence and pressure drop.

Tees (Standard & Reducing)

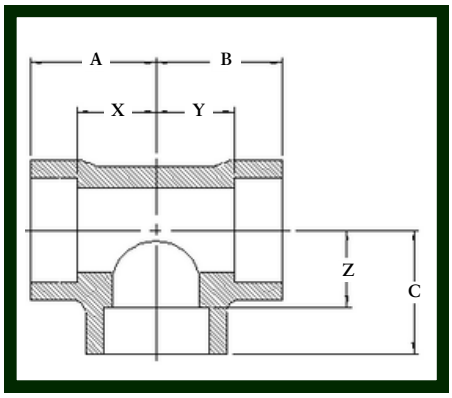

430TBT=SW x SW x (F)NPT
430T1RT=(F)NPT x SW x SW
430T2RT=(F)NPT x (F)NPT x SW
430T3RT=(F)NPT x (F)NPT x (F)NPT

Custom and reducing sizes are available upon request.

PART #	SIZE	A	X	B	Y	C	Z
430T-1	1/4	45/64	7/16	45/64	7/16	45/64	7/16
430T-1-1-3	1/4 x 1/4 x 1/2	57/64	5/8	57/64	5/8	29/32	17/32
430T-2	3/8	13/16	1/2	13/16	1/2	13/16	1/2
430T-2-2-3	3/8 x 3/8 x 1/2	29/32	19/32	29/32	19/32	15/16	9/16
430T-3	1/2	1-1/64	41/64	1-1/64	41/64	1-1/64	41/64
430T-3-1-1	1/2 x 1/4 x 1/4	15/16	9/16	13/16	35/64	29/32	41/64
430T-3-1-3	1/2 x 1/4 x 1/2	1-1/64	41/64	55/64	19/32	1-1/64	41/64
430T-3-2-2	1/2 x 3/8 x 3/8	15/16	9/16	13/16	1/2	29/32	19/32
430T-3-2-3	1/2 x 3/8 x 1/2	1-1/64	41/64	29/32	19/32	1-1/64	41/64
430T-3-3-4	1/2 x 1/2 x 3/4	1-1/8	3/4	1-1/8	3/4	1-3/32	11/16
430T-3-3-5	1/2 x 1/2 x 1	1-5/16	15/16	1-5/16	15/16	1-5/16	7/8
430T-4	3/4	1-3/16	25/32	1-3/16	25/32	1-3/16	25/32
430T-4-3-3	3/4 x 1/2 x 1/2	1-5/64	43/64	1-1/64	41/64	1-7/64	47/64
430T-4-3-4	3/4 x 1/2 x 3/4	1-3/16	25/32	1-7/64	47/64	1-3/16	25/32
430T-4-4-1	3/4 x 3/4 x 1/4	1	19/32	1	19/32	1	47/64
430T-4-4-3	3/4 x 3/4 x 1/2	1-5/64	43/64	1-5/64	43/64	1-7/64	47/64
430T-4-4-5	3/4 x 3/4 x 1	1-5/16	29/32	1-5/16	29/32	1-5/16	7/8
430T-4-4-6	3/4 x 3/4 x 1-1/4	1-5/8	1-7/32	1-5/8	1-7/32	1-7/16	15/16
430T-5	1	1-7/16	1	1-7/16	1	1-7/16	1
430T-5-1-5	1 x 1/4 x 1	1-1/2	1-1/16	1-7/32	61/64	1-1/2	1-1/16
430T-5-2-5	1 x 3/8 x 1	1-7/16	1	1-1/8	13/16	1-7/16	1
430T-5-3-3	1 x 1/2 x 1/2	1-13/64	49/64	1-5/64	45/64	1-15/64	51/64
430T-5-3-4	1 x 1/2 x 3/4	1-5/16	7/8	1-1/8	3/4	1-5/16	29/32
430T-5-3-5	1 x 1/2 x 1	1-7/16	1	1-15/64	7/8	1-7/16	1
430T-5-4-3	1 x 3/4 x 1/2	1-13/64	49/64	1-5/64	43/64	1-15/64	7/8
430T-5-4-5	1 x 3/4 x 1	1-7/16	1	1-5/16	29/32	1-7/16	1
430T-5-5-1	1 x 1 x 1/4	1-1/8	11/16	1-1/8	11/16	1-1/8	55/64
430T-5-5-2	1 x 1 x 3/8	1-1/8	11/16	1-1/8	11/16	1-1/8	13/16
430T-5-5-3	1 x 1 x 1/2	1-13/64	49/64	1-13/64	49/64	1-15/64	7/8
430T-5-5-6	1 x 1 x 1-1/4	1-19/32	1-5/32	1-19/32	1-5/32	1-17/32	1-1/32
430T-6	1-1/4	1-11/16	1-3/16	1-11/16	1-3/16	1-11/16	1-3/16

ALL DIMENSIONS ARE IN INCHES AND IN ACCORDANCE WITH THE 803-6397430 DRAWING

Tees (Standard & Reducing)

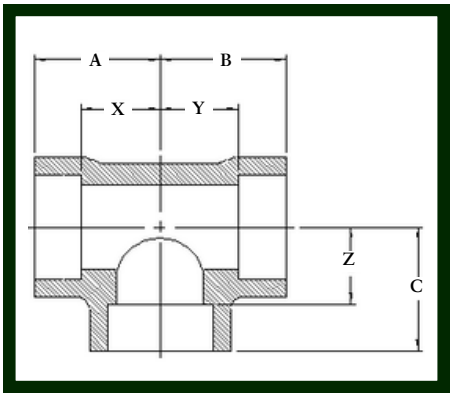

430TBT=SW x SW x (F)NPT
430T1RT=(F)NPT x SW x SW
430T2RT=(F)NPT x (F)NPT x SW
430T3RT=(F)NPT x (F)NPT x (F)NPT

Custom and reducing sizes are available upon request.

PART #	SIZE	A	X	B	Y	C	Z
430T-6-3-6	1-1/4 x 1/2 x 1-1/4	1-11/16	1-3/16	1-13/32	1-1/32	1-11/16	1-3/16
430T-6-5-3	1-1/4 x 1 x 1/2	1-25/64	57/64	1-19/64	55/64	1-31/64	1-7/64
430T-6-5-4	1-1/4 x 1 x 3/4	1-25/64	57/64	1-19/64	55/64	1-31/64	1-5/64
430T-6-5-5	1-1/4 x 1 x 1	1-33/64	1-1/64	1-33/64	1-1/64	1-19/32	1-5/32
430T-6-5-6	1-1/4 x 1 x 1-1/4	1-11/16	1-3/16	1-19/32	1-5/32	1-11/16	1-3/16
430T-6-6-1	1-1/4 x 1-1/4 x 1/4	1-5/32	21/32	1-5/32	21/32	1-9/32	1-1/64
430T-6-6-3	1-1/4 x 1-1/4 x 1/2	1-19/64	51/64	1-19/64	51/64	1-13/32	1-1/32
430T-6-6-4	1-1/4 x 1-1/4 x 3/4	1-25/64	57/64	1-25/64	57/64	1-31/64	1-5/64
430T-6-6-5	1-1/4 x 1-1/4 x 1	1-33/64	1-1/64	1-33/64	1-1/64	1-19/32	1-5/32
430T-6-6-7	1-1/4 x 1-1/4 x1-1/2	1-13/16	1-5/16	1-13/16	1-5/16	1-23/32	1-3/32
430T-7	1-1/2	1-27/32	1-7/32	1-27/32	1-7/32	1-27/32	1-7/32
430T-7-3-3	1-1/2 x 1/2 x 1/2	1-17/32	29/32	1-7/32	27/32	1-3/4	1-3/8
430T-7-4-3	1-1/2 x 3/4 x 1/2	1-35/64	58/64	1-33/64	1-7/64	1-23/32	1-11/32
430T-7-4-4	1-1/2 x 3/4 x 3/4	1-35/64	59/64	1-33/64	1-7/64	1-23/32	1-5/16
430T-7-4-7	1-1/2 x 3/4 x 1-1/2	1-27/32	1-7/32	1-19/32	1-3/16	1-27/32	1-7/32
430T-7-5-3	1-1/2 x 1 x 1/2	1-35/64	59/64	1-33/64	1-5/64	1-23/32	1-11/32
430T-7-5-4	1-1/2 x 1 x 3/4	1-35/64	59/64	1-33/64	1-5/64	1-23/32	1-5/16
430T-7-5-5	1-1/2 x 1 x 1	1-35/64	59/64	1-33/64	1-5/64	1-23/32	1-9/32
430T-7-5-6	1-1/2 x 1 x 1-1/4	1-23/32	1-3/32	1-11/16	1-1/4	1-13/16	1-5/16
430T-7-5-7	1-1/2 x 1 x 1-1/2	1-27/32	1-7/32	1-11/16	1-27/32	1-13/16	1-7/32
430T-7-6-3	1-1/2 x 1-1/4 x 1/2	1-5/16	11/16	1-9/32	25/32	1-17/32	1-5/32
430T-7-6-4	1-1/2 x 1-1/4 x 3/4	1-35/64	59/64	1-33/64	1-1/64	1-23/32	1-5/16
430T-7-6-5	1-1/2 x 1-1/4 x 1	1-35/64	59/64	1-33/64	1-1/64	1-23/32	1-9/32
430T-7-6-6	1-1/2 x 1-1/4 x 1-1/4	1-23/32	1-3/32	1-11/16	1-3/16	1-13/16	1-5/16
430T-7-7-1	1-1/2 x 1-1/2 x 1/4	1-5/16	11/16	1-5/16	11/16	1-17/32	1-17/64
430T-7-7-2	1-1/2 x 1-1/2 x 3/8	1-5/16	11/16	1-5/16	11/16	1-17/32	1-7/32
430T-7-7-3	1-1/2 x 1-1/2 x 1/2	1-5/16	11/16	1-5/16	11/16	1-17/32	1-5/32
430T-7-7-4	1-1/2 x 1-1/2 x 3/4	1-27/64	51/64	1-27/64	51/64	1-19/32	1-3/16
430T-7-7-5	1-1/2 x 1-1/2 x 1	1-35/64	59/64	1-35/64	59/64	1-23/32	1-9/32
430T-7-7-8	1-1/2 x 1-1/2 x 2	2-1/16	1-7/16	2-1/16	1-7/16	1-57/64	1-15/64
430T-8	2	2-1/8	1-15/32	2-1/8	1-15/32	2-1/8	1-15/32
430T-8-3-8	2 x 1/2 x 2	2-1/8	1-15/32	1-27/32	1-15/32	2-1/8	1-15/32

ALL DIMENSIONS ARE IN INCHES AND IN ACCORDANCE WITH THE 803-6397430 DRAWING

Tees (Standard & Reducing)

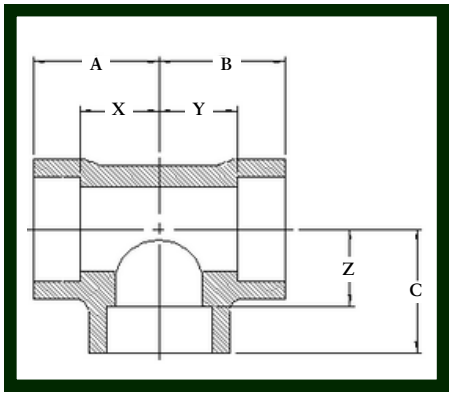

430TBT=SW x SW x (F)NPT
430T1RT=(F)NPT x SW x SW
430T2RT=(F)NPT x (F)NPT x SW
430T3RT=(F)NPT x (F)NPT x (F)NPT

Custom and reducing sizes are available upon request.

PART #	SIZE	A	X	B	Y	C	Z
430T-8-5-8	2 x 1 x 2	2-1/8	1-15/32	2-1/16	1-5/8	2-1/8	1-15/32
430T-8-6-6	2 x 1-1/4 x 1-1/4	1-49/64	1-7/64	1-23/32	1-7/32	2-3/64	1-35/64
430T-8-6-8	2 x 1-1/4 x 2	2-1/8	1-15/32	2-1/16	1-9/16	2-1/8	1-15/32
430T-8-7-3	2 x 1-1/2 x 1/2	1-49/64	1-7/64	1-23/32	1-3/32	2-3/64	1-43/64
430T-8-7-5	2 x 1-1/2 x 1	1-49/64	1-7/64	1-23/32	1-3/32	2-3/64	1-39/64
430T-8-7-6	2 x 1-1/2 x 1-1/4	1-25/32	1-1/8	1-23/32	1-3/32	2-1/32	1-17/32
430T-8-7-7	2 x 1-1/2 x 1-1/2	1-57/64	1-15/64	1-27/32	1-7/32	2-1/16	1-7/16
430T-8-7-8	2 x 1-1/2 x 2	2-1/8	1-15/32	2-1/16	1-7/16	2-1/8	1-15/32
430T-8-8-2	2 x 2 x 3/8	1-19/32	15/16	1-19/32	15/32	1-61/64	1-41/64
430T-8-8-3	2 x 2 x 1/2	1-15/32	13/16	1-15/32	13/16	1-27/32	1-15/32
430T-8-8-4	2 x 2 x 3/4	1-15/32	13/16	1-15/32	13/16	1-27/32	1-7/16
430T-8-8-5	2 x 2 x 1	1-19/32	15/16	1-19/32	15/16	1-61/64	1-33/64
430T-8-8-6	2 x 2 x 1-1/4	1-49/64	1-7/64	1-49/64	1-7/64	2-3/64	1-35/64
430T-8-8-7	2 x 2 x 1-1/2	1-57/64	1-15/64	1-57/64	1-15/64	2-1/16	1-7/16
430T-8-8-9	2 x 2 x 2-1/2	2-19/32	1-15/16	2-19/32	1-15/16	2-25/64	1-39/64
430T-9	2-1/2	2-45/64	1-59/64	2-45/64	1-59/64	2-45/64	1-59/64
430T-9-6-9	2-1/2 x 1-1/4 x 2-1/2	2-11/16	1-29/32	2-19/32	2-3/32	2-11/16	1-29/32
430T-9-7-7	2-1/2 x 1-1/2 x 1-1/2	2-25/64	1-39/64	2-1/4	1-5/8	2-19/32	1-31/32
430T-9-7-9	2-1/2 x 1-1/2 x 2-1/2	2-11/16	1-29/32	2-19/32	1-31/32	2-11/16	1-29/32
430T-9-8-3	2-1/2 x 2 x 1/2	1-3/4	31/32	1-19/32	15/16	2-5/16	1-15/16
430T-9-8-4	2-1/2 x 2 x 3/4	1-3/4	31/32	1-19/32	15/16	2-5/16	1-29/32
430T-9-8-7	2-1/2 x 2 x 1-1/2	2-25/64	1-39/64	2-1/4	1-19/32	2-19/32	1-31/32
430T-9-8-8	2-1/2 x 2 x 2	2-3/8	1-19/32	2-1/4	1-19/32	2-19/32	1-15/16
430T-9-8-9	2-1/2 x 2 x 2-1/2	2-45/64	1-59/64	2-19/32	1-15/16	2-45/64	1-59/64
430T-9-9-3	2-1/2 x 2-1/2 x 1/2	1-7/8	1-3/32	1-7/8	1-3/32	2-3/8	2
430T-9-9-4	2-1/2 x 2-1/2 x 3/4	1-7/8	1-3/32	1-7/8	1-3/32	2-3/8	1-31/32
430T-9-9-5	2-1/2 x 2-1/2 x 1	1-7/8	1-3/32	1-7/8	1-3/32	2-3/8	1-15/16
430T-9-9-6	2-1/2 x 2-1/2 x 1-1/4	2-3/64	1-17/64	2-3/64	1-17/64	2-29/64	1-61/64
430T-9-9-7	2-1/2 x 2-1/2 x 1-1/2	2-5/32	1-3/8	2-5/32	1-3/8	2-1/2	1-7/8
430T-9-9-8	2-1/2 x 2-1/2 x 2	2-25/64	1-39/64	2-25/64	1-39/64	2-19/32	1-15/16
430T-9-9-10	2-1/2 x 2-1/2 x 3	2-63/64	2-13/64	2-63/64	2-13/64	2-53/64	2

ALL DIMENSIONS ARE IN INCHES AND IN ACCORDANCE WITH THE 803-6397430 DRAWING

Tees (Standard & Reducing)

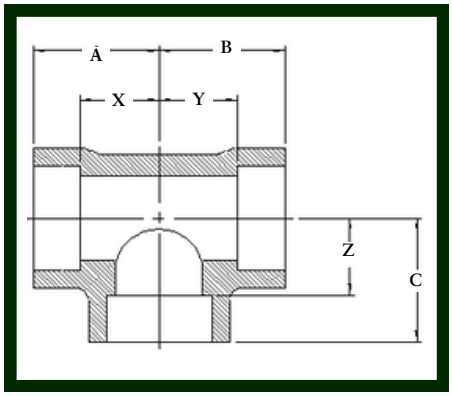

430TBT=SW x SW x (F)NPT
430T1RT=(F)NPT x SW x SW
430T2RT=(F)NPT x (F)NPT x SW
430T3RT=(F)NPT x (F)NPT x (F)NPT

Custom and reducing sizes are available upon request.

PART #	SIZE	A	X	B	Y	C	Z
430T-10	3	3-5/64	2-1/4	3-5/64	2-1/4	3-5/64	2-1/4
430T-10-7-10	3 x 1-1/2 x 3	3-1/16	2-15/64	2-5/8	2	3-1/16	2-15/64
430T-10-8-8	3 x 2 x 2	2-53/64	2	2-45/64	2-3/64	2-63/64	2-21/64
430T-10-8-10	3 x 2 x 3	3-3/32	2-17/64	3	2-11/32	3-3/32	2-17/64
430T-10-9-9	3 x 2-1/2 x 2-1/2	2-27/32	2-1/64	2-11/16	1-29/32	3	2-7/32
430T-10-10-3	3 x 3 x 1/2	1-7/8	1-3/64	1-7/8	1-3/64	2-5/8	2-1/4
430T-10-10-4	3 x 3 x 3/4	1-7/8	1-3/64	1-7/8	1-3/64	2-5/8	2-7/32
430T-10-10-6	3 x 3 x 1-1/4	2-11/64	1-11/32	2-11/64	1-11/32	2-47/64	2-15/64
430T-10-10-7	3 x 3 x 1-1/2	2-9/32	1-29/64	2-9/32	1-29/64	2-13/16	2-3/16
430T-10-10-8	3 x 3 x 2	2-17/32	1-45/64	2-17/32	1-45/64	2-7/8	2-7/32
430T-10-10-9	3 x 3 x 2-1/2	2-53/64	2	2-53/64	2	2-63/64	2-13/64
430T-11	3-1/2	3-27/64	2-35/64	3-27/64	2-35/64	3-27/64	2-35/64
430T-11-9-9	3-1/2 x 2-1/2 x 2-1/2	2-15/16	2-1/16	2-15/16	2-1/16	3-15/64	2-19/64
430T-11-10-9	3-1/2 x 3 x 2-1/2	2-15/16	2-7/64	2-53/64	2	2-15/64	1-29/64
430T-11-11-5	3-1/2 x 3-1/2 x 1	2-5/8	1-3/4	2-5/8	1-3/4	3-9/64	2-45/64
430T-11-11-9	3-1/2 x 3-1/2 x 2-1/2	2-15/16	2-1/16	2-15/16	2-1/16	3-15/64	2-29/64
430T-12	4	3-51/64	2-57/64	3-51/64	2-57/64	3-51/64	2-57/64
430T-12-10-10	4 x 3 x 3	3-19/64	2-25/64	3-5/64	2-1/4	3-19/32	2-49/64
430T-12-10-12	4 x 3 x 4	3-51/64	2-57/64	3-19/32	2-49/64	3-51/64	2-57/64
430T-12-12-7	4 x 4 x 1-1/2	2-33/64	1-39/64	2-33/64	1-39/64	3-5/16	2-11/16
430T-12-12-8	4 x 4 x 2	2-47/64	1-53/64	2-47/64	1-53/64	3-13/32	2-3/4
430T-12-12-9	4 x 4 x 2-1/2	3-19/64	2-25/64	3-19/64	2-25/64	3-19/32	2-13/16
430T-12-12-10	4 x 4 x 3	3-19/64	2-25/64	3-19/64	2-25/64	3-19/32	2-49/64
430T-13	5	4-1/2	3-1/2	4-1/2	3-1/2	4-1/2	3-1/2
430T-13-10-12	5 x 3 x 4	4	3	3-19/32	2-49/64	4-13/32	3-1/2
430T-13-13-12	5 x 5 x 4	4	3	4	3	4-13/32	3-1/2
430T-14	6	5-1/8	4-1/64	5-1/8	4-1/64	5-1/8	4-1/64
430T-14-14-10	6 x 6 x 3	3-41/64	2-17/32	3-41/64	2-17/32	4-3/4	3-59/64
430T-14-14-12	6 x 6 x 4	4-1/8	3-1/64	4-1/8	3-1/64	4-15/16	4-1/32
430T-14-14-13	6 x 6 x 5	4-5/8	3-33/64	4-5/8	3-33/64	5-1/32	4-1/32

ALL DIMENSIONS ARE IN INCHES AND IN ACCORDANCE WITH THE 803-6397430 DRAWING

Single-Sweep Tees

Custom and reducing sizes are available upon request.

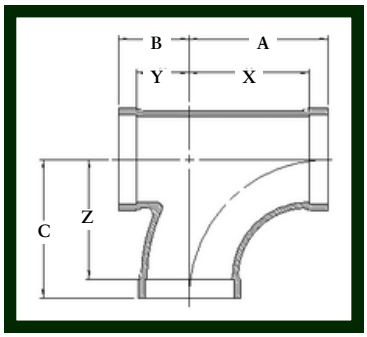

PART #	SIZE	A	X	B	Y	C	Z
430SST-3	1/2	1-3/4	1-3/8	1	5/8	1-3/4	1-3/8
430SST-4	3/4	2	1-19/32	13/16	25/32	2	1-19/32
430SST-5	1	2-5/16	1-7/8	1-5/16	7/8	2-5/16	1-7/8
430SST-6-6-5	1-1/4 x 1-1/4 x 1	2-3/4	2-1/4	1-5/8	1-1/8	2-3/4	2-5/16
430SST-6	1-1/4	2-3/4	2-1/4	1-11/16	1-3/16	2-3/4	2-1/4
430SST-7-6-6	1-1/2 x 1-1/4 x 1-1/4	3-1/8	2-1/2	1-7/8	1-3/8	3-1/8	2-5/8
430SST-7	1-1/2	3-1/8	2-1/2	1-7/8	1-1/4	3-1/8	2-1/2
430SST-8	2	3-3/4	3-3/32	2-1/8	1-15/32	3-3/4	3-3/32
430SST-9	2-1/2	4-1/2	3-23/32	2-9/16	1-25/32	4-1/2	3-23/32
430SST-10	3	5-7/16	4-39/64	2-7/8	2-3/64	5-7/16	4-39/64
430SST-11	3-1/2	6-3/16	5-5/16	3-1/4	2-3/8	6-3/16	5-5/16
430SST-12	4	6-15/16	6-1/32	3-9/16	2-21/32	6-15/16	6-1/32
430SST-13	5	8-1/8	7-1/8	4-5/16	3-5/16	8-1/8	7-1/8
430SST-14	6	9	7-57/64	5	5-57/64	9	7-57/64

ALL DIMENSIONS ARE IN INCHES AND IN ACCORDANCE WITH THE 803-6397430 DRAWING

Double-Sweep Tees

Custom and reducing sizes are available upon request.

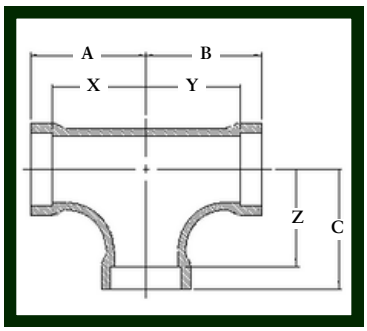

PART #	SIZE	A	X	B	Y	C	Z
430DST-3	1/2	1-3/4	1-3/8	1-3/4	1-3/8	1-3/4	1-3/8
430DST-4	3/4	2	1-19/32	2	1-19/32	2	1-19/32
430DST-5	1	2-5/16	1-7/8	2-5/16	1-7/8	2-5/16	1-7/8
430DST-6	1-1/4	2-3/4	2-1/4	2-3/4	2-1/4	2-3/4	2-1/4
430DST-7	1-1/2	3-1/8	2-1/2	3-1/8	2-1/2	3-1/8	2-1/2
430DST-8	2	3-3/4	3-3/32	3-3/4	3-3/32	3-3/4	3-3/32
430DST-9	2-1/2	4-1/2	3-23/32	4-1/2	3-23/32	4-1/2	3-23/32
430DST-10	3	5-7/16	4-39/64	5-7/16	4-39/64	5-7/16	4-39/64
430DST-11	3-1/2	6-3/16	5-5/16	6-3/16	5-5/16	6-3/16	5-5/16
430DST-12	4	6-15/16	6-1/32	6-15/16	6-1/32	6-15/16	6-1/32
430DST-13	5	8-1/8	7-1/8	8-1/8	7-1/8	8-1/8	7-1/8
430DST-14	6	9	7-57/64	9	7-57/64	9	7-57/64

ALL DIMENSIONS ARE IN INCHES AND IN ACCORDANCE WITH THE 803-6397430 DRAWING

Section 3

Y-Laterals & Crosses

How to Order:
90/10 (B369) + -FV
70/30 (B369) + -FU

Socket-weld y-laterals and crosses are important components used in piping systems for the U.S. Navy. These fittings are specifically designed to provide a branch connection to a main pipe while maintaining the same or smaller diameter of the main pipe.

The purpose of socket-weld y-laterals is to provide a smooth and efficient flow path for fluid flow, while also enabling the branch line to be connected at a 45° angle to the main pipe. This type of fitting is commonly used in piping systems that require the branch line to be diverted to a different process line. The significance of these fittings for the U.S. Navy is that they provide reliable and durable connections that can withstand the demanding environments and operating conditions often encountered in naval vessels.

Socket-weld crosses, on the other hand, provide a branch connection at a 90° angle to the main pipe, allowing for the creation of a four-way intersection. These fittings are useful in applications where the fluid flow needs to be directed to multiple process lines or where there is a need for a complex piping system. The significance of socket-weld crosses for the U.S. Navy is that they provide a versatile and flexible solution for designing piping systems that meet the specific needs of naval vessels.

Both socket-weld y-laterals and crosses are important for the U.S. Navy because they enable the efficient and reliable flow of fluids within piping systems, which is crucial for the operation and safety of naval vessels. These fittings are designed to withstand the harsh operating conditions that naval vessels encounter, including high pressure, temperature, and corrosive environments. As such, they are critical components for ensuring the longevity and effectiveness of naval piping systems.

Y-Laterals

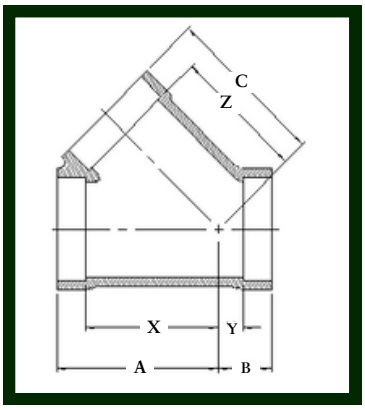

Custom and reducing sizes are available upon request.

PART #	SIZE	A	X	B	Y	C	Z
430LA-3	1/2	1-37/64	1-13/64	39/64	15/64	1-37/64	1-13/64
430LA-4	3/4	1-29/32	1-1/2	23/32	5/16	1-29/32	1-1/2
430LA-5	1	2-21/64	57/64	27/32	13/32	2-21/64	57/64
430LA-6	1-1/4	2-53/64	2-21/64	1-1/64	33/64	2-53/64	2-21/64
430LA-7	1-1/2	3-9/64	2-33/64	1-3/32	15/32	3-9/64	2-45/64
430LA-7-7-5	1-1/2 x 1-1/2 x 1	3-9/64	2-33/64	1-3/32	15/32	3-9/64	2-33/64
430LA-7-7-6	1-1/2 x 1-1/2 x 1-1/4	3-9/64	2-33/64	1-3/32	15/32	3-9/64	2-41/64
430LA-8	2	3-49/64	3-7/64	1-15/64	37/64	3-49/64	3-7/64
430LA-8-8-5	2 x 2 x 1	3-49/64	3-7/64	1-15/64	37/64	3-49/64	3-21/64
430LA-8-8-7	2 x 2 x 1-1/2	3-49/64	3-7/64	1-15/64	37/64	3-49/64	3-9/64
430LA-9	2-1/2	4-47/64	3-61/64	1-33/64	47/64	4-47/64	3-61/64
430LA-9-8-7	2-1/2 x 2 x 1-1/2	4-47/64	3-61/64	1-33/64	55/64	4-47/64	4-7/64
430LA-9-8-8	2-1/2 x 2 x 2	4-47/64	4-5/64	1-33/64	47/64	4-47/64	4-5/64
430LA-9-9-5	2-1/2 x 2-1/2 x 1	4-47/64	3-61/64	1-33/64	47/64	4-47/64	4-19/64
430LA-9-9-7	2-1/2 x 2-1/2 x 1-1/2	4-47/64	3-61/64	1-33/64	47/64	4-47/64	4-7/64
430LA-9-9-8	2-1/2 x 2-1/2 x 2	4-47/64	3-61/64	1-33/64	47/64	4-47/64	4-3/64
430LA-10	3	5-35/64	4-23/32	1-45/64	7/8	5-35/64	4-23/32
430LA-10-8-8	3 x 2 x 2	5-35/64	4-57/64	1-45/64	7/8	5-35/64	4-57/64
430LA-10-10-8	3 x 3 x 2	5-35/64	4-23/32	1-45/64	7/8	5-35/64	4-57/64
430LA-11	3-1/2	6-1/4	5-3/8	1-27/32	31/32	6-1/4	5-3/8
430LA-12	4	6-31/32	6-1/16	2-1/64	1-7/64	6-31/32	6-1/16
430LA-12-12-8	4 x 4 x 2	6-31/32	6-1/16	2-1/64	1-7/64	6-31/32	6-5/16
430LA-12-12-9	4 x 4 x 2-1/2	6-31/32	6-1/16	2-1/64	1-7/64	6-31/32	6-3/16
430LA-12-12-10	4 x 4 x 3	6-31/32	6-1/16	2-1/64	1-7/64	6-31/32	6-9/64
430LA-13	5	8-7/16	7-7/16	2-11/32	1-11/32	8-7/16	7-7/16
430LA-14	6	9-13/16	8-45/64	2-21/32	1-35/64	9-13/16	8-45/64

ALL DIMENSIONS ARE IN INCHES AND IN
ACCORDANCE WITH THE 803-6397430 DRAWING

Crosses

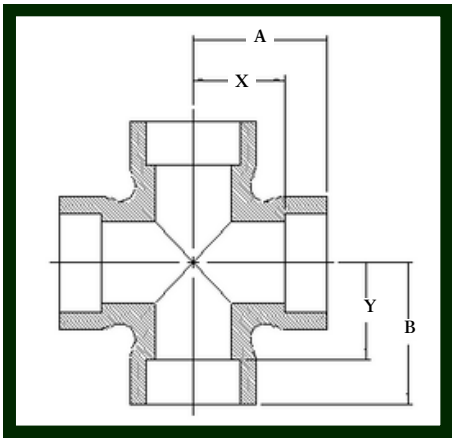

Custom and reducing sizes are available upon request.

PART #	SIZE	A	X	B	Y
430X-3	1/2	1-1/64	41/64	1-1/64	41/64
430X-4	3/4	1-3/16	25/32	1-3/16	25/32
430X-5	1	1-7/16	1	1-7/16	1
430X-5-3	1 x 1/2	1-15/64	55/64	1-13/64	49/64
430X-6	1-1/4	1-11/16	1-3/16	1-11/16	1-3/16
430X-6-3	1-1/4 x 1/2	1-13/32	1-1/32	1-19/64	51/64
430X-7	1-1/2	1-27/32	1-7/32	1-27/32	1-7/32
430X-7-3	1-1/2 x 1/2	1-17/32	1-5/32	1-5/16	11/16
430X-7-5	1-1/2 x 1	1-27/32	1-13/32	1-27/32	1-7/32
430X-8	2	2-1/8	1-15/32	2-1/8	1-15/32
430X-8-3	2 x 1/2	1-27/32	1-3/8	1-15/32	13/16
430X-8-8-8-5	2 x 2 x 2 x 1	2-1/8	1-15/32	2-1/8	1-11/16
430X-9	2-1/2	2-45/64	1-59/64	2-45/64	1-59/64
430X-10	3	3-5/64	2-1/4	3-5/64	2-1/4
430X-11	3-1/2	3-27/64	2-35/64	3-27/64	2-35/64
430X-12	4	3-51/64	2-57/64	3-51/64	2-57/64
430X-13	5	4-1/2	3-1/2	4-1/2	3-1/2

ALL DIMENSIONS ARE IN INCHES AND IN
ACCORDANCE WITH THE 803-6397430 DRAWING

Section 4

Bushings & Couplings

How to Order:

Cast:	**90/10 (B369) + -FV**
	70/30 (B369) + -FU
Barstock:	**90/10 (MIL-C-15726) C70600**
	70/30 (MIL-C-15726) C71500

Reducing couplings and bushings are important components used in piping systems for the U.S. Navy. These fittings are designed to provide a reliable and efficient connection between two pipes of different diameters, while also ensuring a smooth and efficient flow of fluids.

Reducing couplings are used to connect pipes of different diameters, with the larger diameter pipe fitting into the smaller diameter pipe. The purpose of these fittings is to reduce the diameter of the pipe and facilitate a change in the flow path of the fluid. Reducing couplings are commonly used in piping systems for the U.S. Navy to accommodate different equipment sizes and ensure efficient fluid flow. The significance of these fittings is that they provide a reliable and leak-proof connection that can withstand the demanding environments and operating conditions encountered in naval vessels.

Reducing bushings, on the other hand, are used to connect pipes of different diameters, with the larger diameter pipe fitting over the smaller diameter pipe. The purpose of these fittings is to reduce the diameter of the pipe and facilitate a change in the flow path of the fluid. Reducing bushings are commonly used in piping systems for the U.S. Navy to accommodate different equipment sizes and ensure efficient fluid flow. The significance of these fittings is that they provide a reliable and leak-proof connection that can withstand the demanding environments and operating conditions encountered in naval vessels.

Overall, reducing couplings and bushings are critical components of piping systems for the U.S. Navy. These fittings enable the reliable and efficient flow of fluids, accommodate different equipment sizes, and ensure efficient fluid flow. They are designed to withstand the harsh operating conditions encountered in naval vessels, including high pressure, temperature, and corrosive environments, and are essential for ensuring the longevity and effectiveness of naval piping systems. The proper installation and use of reducing couplings and bushings can contribute to the overall reliability and safety of piping systems in U.S. Navy vessels.

Reducing Bushings

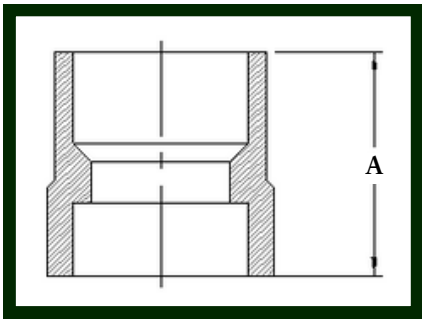

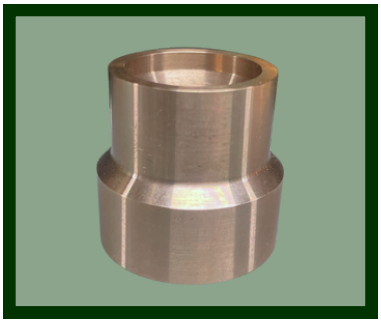

Custom and reducing sizes are available upon request.

PART #	SIZE	A
430B-2-1	3/8 x 1/4	15/16
430B-3-1	1/2 x 1/4	1-1/16
430B-3-2	1/2 x 3/8	1-1/16
430B-4-1	3/4 x 1/4	1-1/16
430B-4-2	3/4 x 3/8	1-3/16
430B-4-3	3/4 x 1/2	1-3/16
430B-5-1	1 x 1/4	1-15/64
430B-5-2	1 x 3/8	1-3/16
430B-5-3	1 x 1/2	1-5/32
430B-5-4	1 x 3/4	1-29/64
430B-6-1	1-1/4 x 1/4	1-15/32
430B-6-2	1-1/4 x 3/8	1-13/32
430B-6-3	1-1/4 x 1/2	1-13/32
430B-6-4	1-1/4 x 3/4	1-21/64
430B-6-5	1-1/4 x 1	1-7/16
430B-7-1	1-1/2 x 1/4	1-23/32
430B-7-2	1-1/2 x 3/8	1-21/32
430B-7-3	1-1/2 x 1/2	1-41/64
430B-7-4	1-1/2 x 3/4	1-37/64
430B-7-5	1-1/2 x 1	1-15/32
430B-7-6	1-1/2 x 1-1/4	1-5/8
430B-8-1	2 x 1/4	1-31/32
430B-8-2	2 x 3/8	1-15/16
430B-8-3	2 x 1/2	1-29/32
430B-8-4	2 x 3/4	1-27/32
430B-8-5	2 x 1	1-47/64
430B-8-6	2 x 1-1/4	1-5/8

PART #	SIZE	A
430B-8-7	2 x 1-1/2	1-41/64
430B-9-3	2-1/2 x 1/2	2-19/64
430B-9-4	2-1/2 x 3/4	2-7/32
430B-9-5	2-1/2 x 1	2-1/8
430B-9-6	2-1/2 x 1-1/4	2
430B-9-7	2-1/2 x 1-1/2	2-1/64
430B-9-8	2-1/2 x 2	1-49/64
430B-10-5	3 x 1	2-31/64
430B-10-6	3 x 1-1/4	2-21/32
430B-10-7	3 x 1-1/2	2-3/8
430B-10-8	3 x 2	2-1/8
430B-10-9	3 x 2-1/2	2-1/64
430B-12-5	4 x 1	3-1/16
430B-12-6	4 x 1-1/4	2-15/16
430B-12-7	4 x 1-1/2	2-61/64
430B-12-8	4 x 2	2-45/64
430B-12-9	4 x 2-1/2	2-37/64
430B-12-10	4 x 3	2-19/64
430B-13-8	5 x 2	3-11/32
430B-14-9	6 x 2-1/2	3-27/32
430B-14-10	6 x 3	3-9/16
430B-14-13	6 x 5	2-41/64
430B-15-13	8 x 5	3-45/64

ALL DIMENSIONS ARE IN INCHES AND IN ACCORDANCE WITH THE 803-6397430 DRAWING

Reducing Couplings

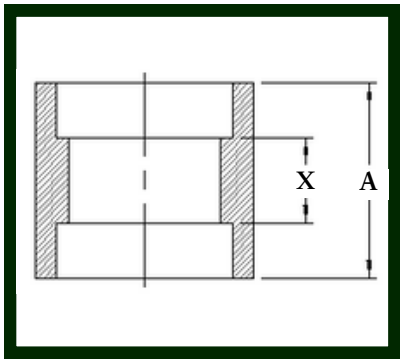

Also available:
430C1T-SW x (F) NPT
430C2T-(F)NPT x (F)NPT

PART #	SIZE	A	X
430C-1	1/4	31/32	7/16
430C-2-1	3/8 x 1/4	1-1/64	7/16
430C-2	3/8	1-3/64	27/64
430C-3-1	1/2 x 1/4	1-1/8	31/64
430C-3-2	1/2 x 3/8	1-11/64	31/64
430C-3	1/2	1-19/64	35/64
430C-4-1	3/4 x 1/4	1-15/64	9/16
430C-4-2	3/4 x 3/8	1-15/64	33/64
430C-4-3	3/4 x 1/2	1-23/64	37/64
430C-4	3/4	1-7/16	5/8
430C-5-1	1 x 1/4	1-31/64	25/32
430C-5-2	1 x 3/8	1-31/64	47/64
430C-5-3	1 x 1/2	1-31/64	43/64
430C-5-4	1 x 3/4	1-9/16	23/32
430C-5	1	1-11/16	13/16
430C-6-1	1-1/4 x 1/4	1-21/32	57/64
430C-6-2	1-1/4 x 3/8	1-21/32	27/32
430C-6-3	1-1/4 x 1/2	1-25/32	29/32
430C-6-4	1-1/4 x 3/4	1-25/32	7/8
430C-6-5	1-1/4 x 1	1-49/64	53/64
430C-6	1-1/4	1-55/64	55/64
430C-7-3	1-1/2 x 1/2	1-51/64	51/64
430C-7-4	1-1/2 x 3/4	1-51/64	49/64
430C-7-5	1-1/2 x 1	1-51/64	47/64
430C-7-6	1-1/2 x 1-1/4	1-57/64	49/64
430C-7	1-1/2	1-59/64	43/64
430C-8-3	2 x 1/2	2-1/32	1
430C-8-4	2 x 3/4	2-3/16	1-1/8

PART #	SIZE	A	X
430C-8-5	2 x 1	2-13/64	1-7/64
430C-8-6	2 x 1-1/4	2-1/32	7/8
430C-8-7	2 x 1-1/2	2-1/16	25/32
430C-8	2	2-13/64	57/64
430C-9-3	2-1/2 x 1/2	2-7/8	1-23/32
430C-9-4	2-1/2 x 3/4	2-7/8	1-11/16
430C-9-5	2-1/2 x 1	2-7/8	1-21/32
430C-9-6	2-1/2 x 1-1/4	2-7/8	1-19/32
430C-9-7	2-1/2 x 1-1/2	2-7/8	1-15/32
430C-9-8	2-1/2 x 2	2-7/8	1-7/16
430C-9	2-1/2	2-7/8	1-5/16
430C-10-5	3 x 1	3-11/16	2-27/64
430C-10-6	3 x 1-1/4	3-11/16	2-23/64
430C-10-7	3 x 1-1/2	3-3/16	1-47/64
430C-10-8	3 x 2	3-3/16	1-45/64
430C-10-9	3 x 2-1/2	3-3/16	1-37/64
430C-10	3	3-3/16	1-17/32
430C-12-7	4 x 1-1/2	4-3/8	2-27/32
430C-12-8	4 x 2	3-11/16	2-1/8
430C-12-9	4 x 2-1/2	3-11/16	2
430C-12-10	4 x 3	3-11/16	1-61/64
430C-12	4	3-11/16	1-7/8
430C-14-10	6 x 3	4-3/4	2-13/16
430C-14	6	4-3/4	2-17/32

ALL DIMENSIONS ARE IN INCHES AND IN ACCORDANCE WITH THE 803-6397430 DRAWING

Section 5

Adapters, Caps & Plugs

How to Order:

Cast:	**90/10 (B369) + -FV**
	70/30 (B369) + -FU
Barstock:	**90/10 (MIL-C-15726) C70600**
	70/30 (MIL-C-15726) C71500

Socket-weld adapters, pipes, and plugs are critical components used in piping systems for the U.S. Navy. These fittings are designed to provide a reliable and durable connection between pipes, while also ensuring a smooth and efficient flow of fluids.

Socket-weld adapters are used to connect two different types of pipes, such as a threaded pipe and a socket-weld pipe. The purpose of these fittings is to provide a reliable and leak-proof connection between the two types of pipes. Socket-weld adapters are commonly used in piping systems for the U.S. Navy to accommodate different equipment types and ensure efficient fluid flow. The significance of these fittings is that they provide a reliable and durable connection that can withstand the demanding environments and operating conditions encountered in naval vessels.

Socket-weld pipes are straight sections of piping that are designed to be joined together using socket-weld fittings. The purpose of these pipes is to transport fluids from one location to another within the piping system. Socket-weld pipes are commonly used in piping systems for the U.S. Navy due to their durability and ability to withstand the harsh operating conditions encountered in naval vessels. The significance of these pipes is that they provide a reliable and efficient means of transporting fluids within the piping system.

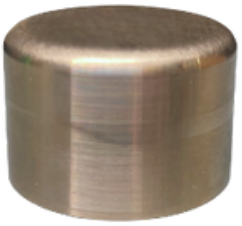

Socket-weld plugs are used to seal off the end of a pipe or fitting. The purpose of these plugs is to prevent fluid from escaping the piping system, or to allow for testing and inspection of the system. Socket-weld plugs are commonly used in piping systems for the U.S. Navy to ensure the integrity of the system and to allow for testing and inspection when necessary. The significance of these fittings is that they provide a reliable and leak-proof seal that can withstand the demanding environments and operating conditions encountered in naval vessels.

Overall, socket-weld adapters, pipes, and plugs are essential components of piping systems for the U.S. Navy. These fittings enable the reliable and efficient flow of fluids, accommodate different equipment types, and ensure the integrity and safety of the piping system. They are designed to withstand the harsh operating conditions encountered in naval vessels, including high pressure, temperature, and corrosive environments, and are critical for ensuring the longevity and effectiveness of naval piping systems.

NPT (M) Adapters

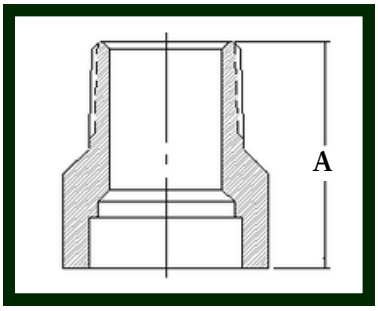

Custom and reducing sizes are available upon request.

PART #	SIZE	A
430MA-1	1/4	1-7/32
430MA-2	3/8	1-19/64
430MA-2-3	3/8 x 1/2	1-5/16
430MA-3	1/2	1-37/64
430MA-3-5	1/2 x 1	1-39/64
430MA-4	3/4	1-19/32
430MA-5	1	1-29/32
430MA-6	1-1/4	1-63/64
430MA-7	1-1/2	2-5/32
430MA-8	2	2-1/4
430MA-9	2-1/2	2-15/16

ALL DIMENSIONS ARE IN INCHES AND IN ACCORDANCE WITH THE 803-6397430 DRAWING

NPT (F) Adapters

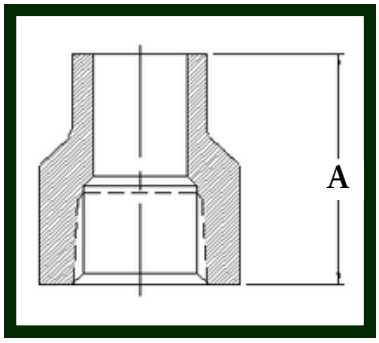

Custom and reducing sizes are available upon request.

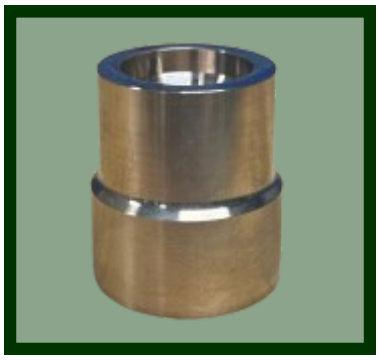

PART #	SIZE	A
430FA-1-0	1/4 x 1/8	1
430FA-1	1/4	1-1/16
430FA-2	3/8	1-3/8
430FA-3-1	1/2 x 1/4	1-1/16
430FA-3	1/2	1-17/32
430FA-4-3	3/4 x 1/2	1-3/16
430FA-4	3/4	1-13/32
430FA-5-3	1 x 1/2	1-1/4
430FA-5	1	1-9/16
430FA-6	1-1/4	2-1/8
430FA-7	1-1/2	2-3/16
430FA-8	2	2-3/8
430FA-9	2-1/2	2-17/32

ALL DIMENSIONS ARE IN INCHES AND IN ACCORDANCE WITH THE 803-6397430 DRAWING

Caps

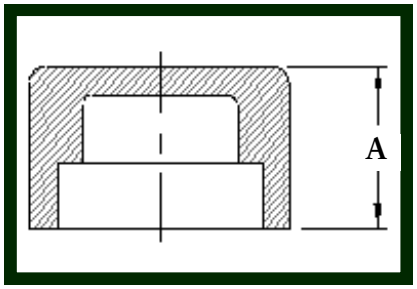

Also available (F) NPT
430CA1T-

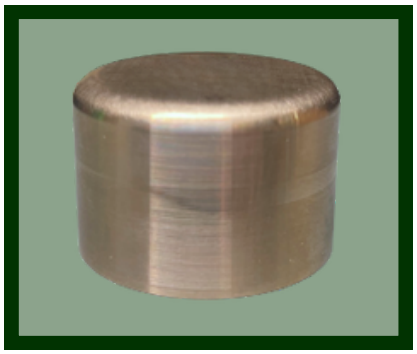

PART #	SIZE	A
430CA-1	1/4	21/32
430CA-2	3/8	45/64
430CA-3	1/2	13/16
430CA-4	3/4	15/16
430CA-5	1	1-1/16
430CA-6	1-1/4	1-3/16
430CA-7	1-1/2	1-1/4
430CA-8	2	1-5/16
430CA-9	2-1/2	1-9/16
430CA-10	3	1-21/32

ALL DIMENSIONS ARE IN INCHES AND IN ACCORDANCE WITH THE 803-6397430 DRAWING

Plugs

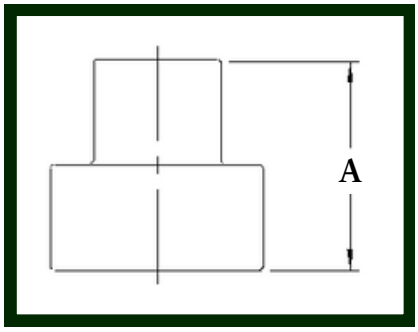

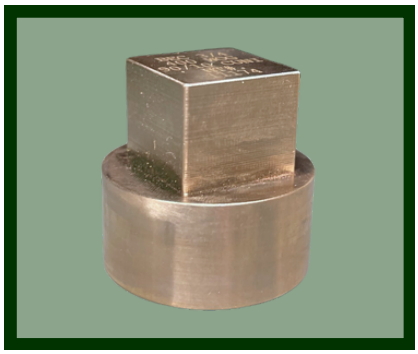

PART #	SIZE	A
430SP-1	1/4	11/16
430SP-2	3/8	3/4
430SP-3	1/2	29/32
430SP-4	3/4	1
430SP-5	1	1-9/64
430SP-6	1-1/4	1-15/64
430SP-7	1-1/2	1-3/8
430SP-8	2	1-15/32
430SP-9	2-1/2	1-3/4
430SP-10	3	1-7/8

ALL DIMENSIONS ARE IN INCHES AND IN ACCORDANCE WITH THE 803-6397430 DRAWING

Section 6

Threadpieces, Tailpieces & Assemblies

How to Order:

Cast:	**90/10 (B369) + -FV**
	70/30 (B369) + -FU
Barstock:	**90/10 (MIL-C-15726) C70600**
	70/30 (MIL-C-15726) C71500

Socket-weld adapters, pipes, and plugs are critical components used in piping systems for the U.S. Navy. These fittings are designed to provide a reliable and durable connection between pipes, while also ensuring a smooth and efficient flow of fluids.

Socket-weld adapters are used to connect two different types of pipes, such as a threaded pipe and a socket-weld pipe. The purpose of these fittings is to provide a reliable and leak-proof connection between the two types of pipes. Socket-weld adapters are commonly used in piping systems for the U.S. Navy to accommodate different equipment types and ensure efficient fluid flow. The significance of these fittings is that they provide a reliable and durable connection that can withstand the demanding environments and operating conditions encountered in naval vessels.

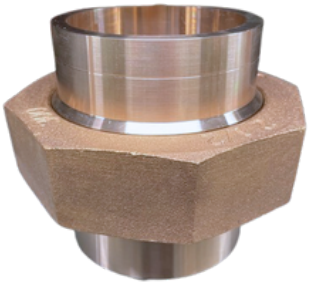

Socket-weld pipes are straight sections of piping that are designed to be joined together using socket-weld fittings. The purpose of these pipes is to transport fluids from one location to another within the piping system. Socket-weld pipes are commonly used in piping systems for the U.S. Navy due to their durability and ability to withstand the harsh operating conditions encountered in naval vessels. The significance of these pipes is that they provide a reliable and efficient means of transporting fluids within the piping system.

Socket-weld plugs are used to seal off the end of a pipe or fitting. The purpose of these plugs is to prevent fluid from escaping the piping system, or to allow for testing and inspection of the system. Socket-weld plugs are commonly used in piping systems for the U.S. Navy to ensure the integrity of the system and to allow for testing and inspection when necessary. The significance of these fittings is that they provide a reliable and leak-proof seal that can withstand the demanding environments and operating conditions encountered in naval vessels.

Moreover, socket-weld adapters, pipes, and plugs are essential components of piping systems for the U.S. Navy. These fittings enable the reliable and efficient flow of fluids, accommodate different equipment types, and ensure the integrity and safety of the piping system. They are designed to withstand the harsh operating conditions encountered in naval vessels, including high pressure, temperature, and corrosive environments, and are critical for ensuring the longevity and effectiveness of naval piping systems.

Union Assemblies

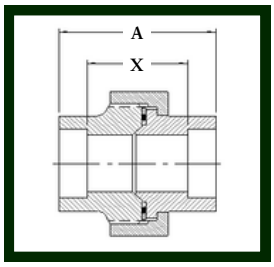

430AY1T-SW x NPT(M)
430AY2T-NPT(M) x NPT (M)
430AY1F-SW x NPT(F)
430AY2F NPT(F) x NPT(F)

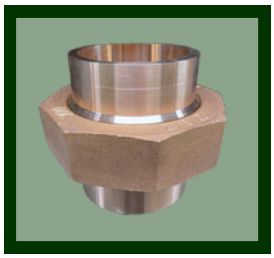

PART #	SIZE	A	X
430AY-1	1/4	1-5/8	1-3/32
430AY-2	3/8	1-13/16	1-3/16
430AY-3	1/2	1-15/16	1-3/16
430AY-4	3/4	2-1/4	1-7/16
430AY-5	1	2-7/16	1-9/16
430AY-6	1-1/4	2-13/16	1-13/16
430AY-7	1-1/2	3	1-3/4
430AY-8	2	3-3/8	2-1/16
430AY-9	2-1/2	4-3/64	2-15/32
430AY-10	3	4-5/16	2-13/32

ALL DIMENSIONS ARE IN INCHES AND IN ACCORDANCE WITH THE 803-6397430 DRAWING

Union Tailpieces & Threadpieces

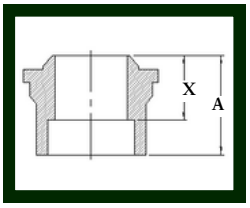

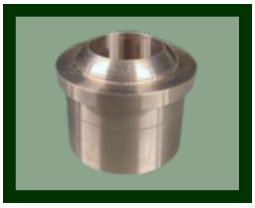

Tailpiece is available in NPT(M) & NPT(F)

Threadpiece is available in NPT(F)

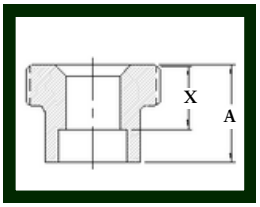

PART #	SIZE	A	X
430TL-1	1/4	7/8	39/64
430TL-2	3/8	61/64	41/64
430TL-3	1/2	1-3/64	43/64
430TL-4	3/4	1-5/32	3/4
430TL-5	1	1-19/64	55/64
430TL-6	1-1/4	1-15/32	31/32
430TL-7	1-1/2	1-5/8	1
430TL-8	2	1-27/32	1-3/16
430TL-9	2-1/2	2-5/32	1-3/8
430TL-10	3	2-23/64	1-17/32

PART #	SIZE	A	X
430TH-1	1/4	27/32	37/64
430TH-2	3/8	15/16	5/8
430TH-3	1/2	63/64	39/64
430TH-4	3/4	1-3/16	25/32
430TH-5	1	1-17/64	53/64
430TH-6	1-1/4	1-7/16	15/16
430TH-7	1-1/2	1-33/64	57/64
430TH-8	2	1-43/64	1-1/64
430TH-9	2-1/2	2-3/64	1-17/64
430TH-10	3	2-5/32	1-21/64

ALL DIMENSIONS ARE IN INCHES AND IN ACCORDANCE WITH THE 803-6397430 DRAWING

Section 7

Flanges

Socket-weld flanges are important components used in piping systems for the U.S. Navy. These flanges are designed to provide a reliable and leak-proof connection between pipes, valves, and other equipment, while also allowing for easy disassembly and maintenance.

The purpose of socket-weld flanges is to create a connection point between pipes, valves, and other equipment that can be easily disconnected for maintenance or repairs. These flanges provide a reliable and leak-proof connection, which is critical for the safe and efficient operation of piping systems in U.S. Navy vessels. Socket-weld flanges are commonly used in high-pressure piping systems, where a secure and tight connection is essential to prevent leaks or failures.

The significance of socket-weld flanges in U.S. Navy vessels cannot be overstated. These flanges are critical for maintaining the reliability and safety of piping systems, which are essential for the operation of the vessel. In addition, socket-weld flanges are designed to withstand the harsh operating conditions encountered in naval vessels, including high pressure, temperature, and corrosive environments. This makes them ideal for use in the demanding environments of naval vessels.

Socket-weld flanges are available in a variety of materials, including stainless steel, carbon steel, and other alloys. The choice of material will depend on the specific application and operating conditions of the piping system. Proper installation and use of socket-weld flanges are essential for ensuring the integrity and safety of the piping system. This includes proper alignment and torqueing of the bolts, as well as regular inspection and maintenance.

Further, socket-weld flanges are critical components of piping systems for the U.S. Navy. They provide a reliable and leak-proof connection between pipes, valves, and other equipment, while also allowing for easy disassembly and maintenance. The proper selection, installation, and use of socket-weld flanges can contribute to the overall reliability and safety of piping systems in U.S. Navy vessels.

Class 150 SW Navy Flanges

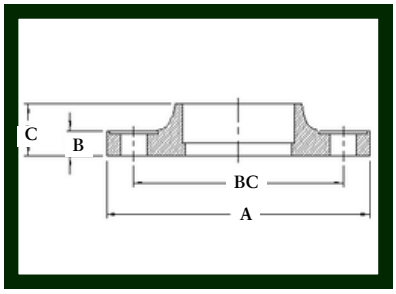

PART # (70/30)	PART # (90/10)	SIZE	A	B	C	# OF HOLES	BC
319121(SW)	319124(SW)	1/2	3-9/16	3/8	3/4	3	2-7/16
319122(SW)	319125(SW)	3/4	3-13/16	7/16	3/4	4	2-11/16
319123(SW)	319126(SW)	1	4-1/4	7/16	3/4	4	3-1/8
319117(SW)	319119(SW)	1-1/4	4-1/2	7/16	3/4	4	3-3/8
319118(SW)	319120(SW)	1-1/2	5-1/16	7/16	13/16	6	3-15/16
319021(SW)	319032(SW)	2	5-9/16	7/16	15/16	6	4-7/16
319022(SW)	319033(SW)	2-1/2	6-1/8	1/2	15/16	6	5
319023(SW)	319034(SW)	3	6-5/8	1/2	15/16	8	5-1/2
319024(SW)	219035(SW)	3-1/2	7-3/16	1/2	15/16	8	6-1/16
319025(SW)	319036(SW)	4	7-11/16	1/2	1-1/8	8	6-9/16
319026(SW)	319037(SW)	5	9-1/16	9/16	1-5/16	10	7-13/16
319027(SW)	319038(SW)	6	10-1/8	9/16	1-7/16	12	8-7/8
319028(SW)	319039(SW)	8	12-3/8	5/8	1-5/8	14	11-1/16
319029(SW)	319040(SW)	10	15	11/16	1-13/16	15	13-7/16
319030(SW)	319041(SW)	12	17-5/8	3/4	2	18	16-1/16

MATERIAL	MAKE/TYPE	MATERIAL DESIGNATOR	BEC MATERIAL DESIGNATORS
70/30	CASTING	ASTM B369 UNS C96400	-FU
90/10	CASTING	ASTM B369 UNS C96200	-FV

ALL DIMENSIONS ARE IN INCHES AND IN ACCORDANCE WITH THE 810-4715319 DRAWING

Class 150 Navy Slip-ons

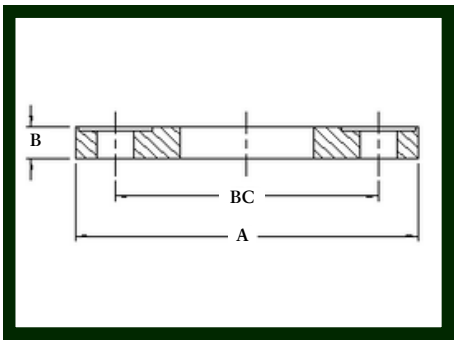

PART # (70/30)	PART# (90/10)	SIZE	A	B	# OF HOLES	BC
319121(SO)	319124(SO)	1/2	3-9/16	3/8	3	2-7/16
319122(SO)	319125(SO)	3/4	3-13/16	7/16	4	2-11/16
319123(SO)	319126(SO)	1	4-1/4	7/16	4	3-1/8
319117(SO)	319119(SO)	1-1/4	4-1/2	7/16	4	3-3/8
319118(SO)	319120(SO)	1-1/2	5-1/16	7/16	6	3-15/16
319021(SO)	319032(SO)	2	5-9/16	7/16	6	4-7/16
319022(SO)	319033(SO)	2-1/2	6-1/8	1/2	6	5
319023(SO)	319034(SO)	3	6-5/8	1/2	8	5-1/2
319024(SO)	319035(SO)	3-1/2	7-3/16	1/2	8	6-1/16
319025(SO)	319036(SO)	4	7-11/16	1/2	8	6-9/16
319026(SO)	319037(SO)	5	9-1/16	9/16	10	7-13/16
319027(SO)	319038(SO)	6	10-1/8	9/16	12	8-7/8
319028(SO)	319039(SO)	8	12-3/8	5/8	14	11-1/16
319029(SO)	319040(SO)	10	15	11/16	15	13-7/16
319030(SO)	319041(SO)	12	17-5/8	3/4	18	16-1/16

Blind and raised face flanges available upon request

MATERIAL	MAKE/TYPE	MATERIAL DESIGNATOR	BEC MATERIAL DESIGNATORS
70/30	CASTING	ASTM B369 UNS C96400	-FU
90/10	CASTING	ASTM B369 UNS C96200	-FV

ALL DIMENSIONS ARE IN INCHES AND IN ACCORDANCE WITH THE 810-4715319 DRAWING

Class 200 SW Navy Flanges

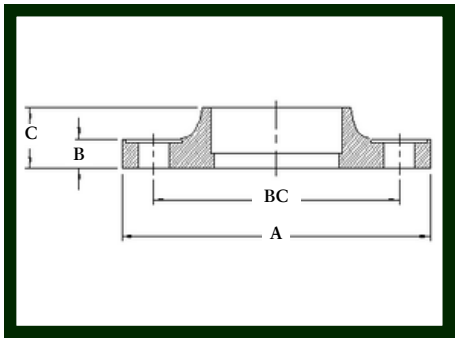

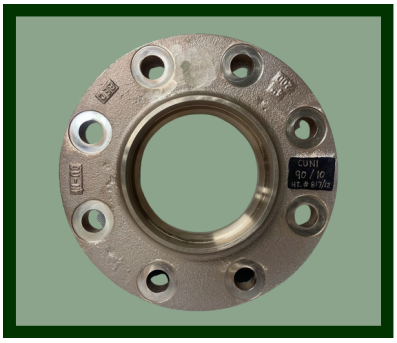

PART # (70/30)	PART # (90/10)	SIZE	A	B	C	# OF HOLES	BC
319002(SW)	319011(SW)	2-1/2	7	9/16	1-1/16	4	5-1/2
319003(SW)	319012(SW)	3	7-1/2	5/8	1-1/8	4	6
319004(SW)	319013(SW)	3-1/2	8-1/2	11/16	1-3/16	8	7
319005(SW)	319014(SW)	4	9	11/16	1-5/16	8	7-1/2
319006(SW)	319015(SW)	5	10	3/4	1-1/2	8	8-1/2
319007(SW)	319016(SW)	6	11	13/16	1-11/16	8	9-1/2
319008(SW)	319017(SW)	8	13-1/2	15/16	1-15/16	8	11-3/4
319009(SW)	319018(SW)	10	16	1	2-1/8	12	14-1/4
319001(SW)	319019(SW)	2	6	1/2	1	4	4-3/4
319010(SW)	319020(SW)	12	19	1-1/16	2-5/16	12	17
319071(SW)	319072(SW)	14	21	1-3/16	2-8/16	12	18-3/4

MATERIAL	MAKE/TYPE	MATERIAL DESIGNATOR	BEC MATERIAL DESIGNATORS
70/30	CASTING	ASTM B369 UNS C96400	-FU
90/10	CASTING	ASTM B369 UNS C96200	-FV

ALL DIMENSIONS ARE IN INCHES AND IN ACCORDANCE WITH THE 810-4715319 DRAWING

Class 250 SW Navy Flanges

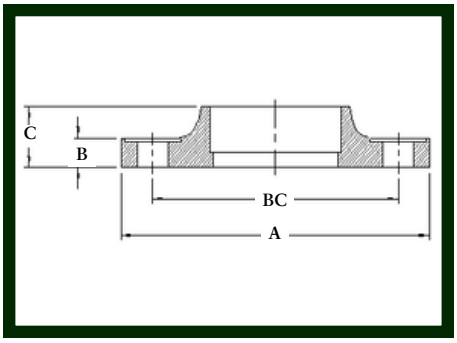

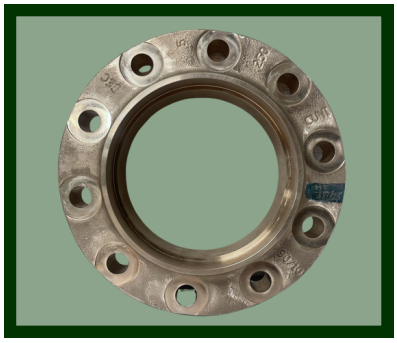

PART # (70/30)	PART # (90/10)	SIZE	A	B	C	# OF HOLES	BC
319131(SW)	319136(SW)	1/2	3-9/16	11/16	13/16	3	2-7/16
319132(SW)	319137(SW)	3/4	3-13/16	11/16	13/16	4	2-11/16
319133(SW)	319138(SW)	1	4-1/4	3/4	15/16	4	3-1/8
319134(SW)	319139(SW)	1-1/4	4-1/2	13/16	1-1/16	4	3-3/8
319135(SW)	319140(SW)	1-1/2	5-1/16	13/16	1-3/16	6	3-15/16
319043(SW)	319054(SW)	2	5-9/16	13/16	1-5/16	6	4-7/16
319044(SW)	319055(SW)	2-1/2	6-1/8	15/16	1-7/16	6	5
319045(SW)	319056(SW)	3	6-5/8	15/16	1-7/16	8	5-1/2
319046(SW)	319057(SW)	3-1/2	7-3/16	1	1-1/2	8	6-1/16
319047(SW)	319058(SW)	4	7-11/16	1	1-5/8	8	6-9/16
319048(SW)	319059(SW)	5	9-1/16	1-1/16	1-13/16	10	7-13/16
319049(SW)	319060(SW)	6	10-1/8	1-3/16	2-1/16	12	8-7/8
319050(SW)	319061(SW)	8	12-3/8	1-5/16	2-5/16	14	11-1/16
319051(SW)	319062(SW)	10	15	1-7/16	2-9/16	15	13-7/16
319052(SW)	319063(SW)	12	17-5/8	1-1/2	2-3/4	18	16-1/16

MATERIAL	MAKE/TYPE	MATERIAL DESIGNATOR	BEC MATERIAL DESIGNATORS
70/30	CASTING	ASTM B369 UNS C96400	-FU
90/10	CASTING	ASTM B369 UNS C96200	-FV

ALL DIMENSIONS ARE IN INCHES AND IN ACCORDANCE WITH THE 810-4715319 DRAWING

Class 400 FFW Navy Flanges

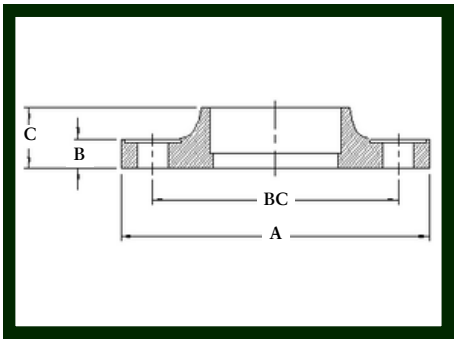

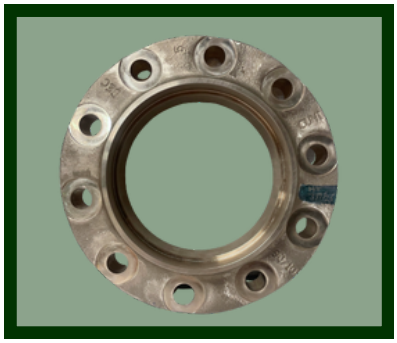

PART # (70/30)	PART # (90/10)	SIZE	A	B	C	# OF HOLES	BC
319141(SW)	319157(SW)	1/4	3-3/4	25/64	7/8	3	2-5/8
319142(SW)	319158(SW)	3/8	3-7/8	17/32	7/8	4	2-3/4
319143(SW)	319159(SW)	1/2	4	45/64	29/32	4	2-7/8
319144(SW)	319160(SW)	3/4	4-5/16	29/32	15/16	4	3-3/16
319145(SW)	319161(SW)	1	5-1/16	1-11/64	1	5	3-3/4
319146(SW)	319162(SW)	1-1/4	5-3/8	1-33/64	1-1/8	5	4-1/16
319147(SW)	319163(SW)	1-1/2	5-15/16	1-3/4	1-3/16	6	4-5/8
319148(SW)	319164(SW)	2	6-1/2	2-15/64	1-5/16	7	5-3/16
319149(SW)	319165(SW)	2-1/2	7-9/16	2-45/64	1-7/16	8	6
319150(SW)	319166(SW)	3	8-1/8	3-5/16	1-7/16	8	6-9/16
319151(SW)	319167(SW)	3-1/2	8-11/16	3-13/16	1-1/2	9	7-1/8
319152(SW)	319168(SW)	4	9-1/4	4-9/32	1-5/8	9	7-11/16
319153(SW)	319169(SW)	5	10-3/8	5-5/16	1-13/16	11	8-13/16
319154(SW)	319170(SW)	6	11-15/16	6-23/64	2-1/16	12	10-3/16
319155(SW)	319171(SW)	8	14-3/4	8-21/64	2-3/16	13	12-3/4
319156(SW)	319172(SW)	10	17	10-3/8	2-9/16	15	15

MATERIAL	MAKE/TYPE	MATERIAL DESIGNATOR	BEC MATERIAL DESIGNATORS
70/30	CASTING	ASTM B369 UNS C96400	-FU
90/10	CASTING	ASTM B369 UNS C96200	-FV

ALL DIMENSIONS ARE IN INCHES AND IN ACCORDANCE WITH THE 810-4715319 DRAWING

Section 8

Cross-Reference Index

A cross-reference list for part numbers serves as a crucial resource for naval defense personnel and organizations. It enables them to effectively navigate the diverse array of part numbers and establish connections between different suppliers, systems, and equipment. This ensures compatibility and interchangeability of parts, facilitating efficient maintenance, repairs, and replacements.

By utilizing a cross-reference list, naval defense entities can optimize their supply chain management. They can identify alternative or equivalent parts from various sources, reducing dependence on single suppliers and mitigating risks associated with limited availability or discontinuation of specific parts. This improves procurement flexibility, enables cost-effective solutions, and minimizes downtime during critical operations.

TYPE	LEE BRASS 90/10	BEC 90/10	LEE BRASS 70/30	BEC 70/30	PAGE #
90° Elbow	6801-	430L-_-FV	6901-	430L-_-FU	8
90° Elbow S.B. x (F) NPT	6802-	430L1T	6902-	430L1T-_-FU	8
45° Elbow	6804-	430FL-_-FV	6904-	430FL-_-FU	9
Street Elbow	6808-	430SL-_-FV	6908-	430SL-_-FU	11
90° Long-Turn Elbow	6811-	430LTL-_-FV	6911-	430LTL-_-FU	9
Union Threadpiece	6812-	430TH-_-FV	6912-	430TH-_-FU	28
Union Tailpiece	6813-	430TL-_-FV	6913-	430TL-_-FU	28
Union Assembly	6815-	430AY-_-FV	6915-	430AY-_-FU	28
Tees (Standard & Reducing)	6821-	430T-_-FV	6921-	430T-_-FU	13-16
Tees S.B. x (F) NPT	6823-	430TBT-_-FV	6923-	430TBT-_-FU	13-16
Single-Sweep Tee	6830-	430SST-_-FV	6930-	430SST-_-FU	17
Double-Sweep Tee	6833-	430DST-_-FV	6933-	430DST-_-FU	17
Crosses	6835-	430X-_-FV	6935-	430X-_-FU	20
Y-Laterals	6840-	430LA-_-FV	6940-	430LA-_-FU	19
Reducing Coupling	6850-	430C-_-FV	6950-	430C-_-FU	23
Coupling S.B. x (F) NPT	6851	430C1T-_-FV	6951	430C1T-_-FV	23
Caps	6854-	430CA-_-FV	6954-	430CA-_-FU	26
Closed Return	6855-	430RC-_-FV	6955-	430RC-_-FU	10
Open Return	6856-	430R-_-FV	6956-	430R-_-FU	10
Reducing Bushing	6857-	430B-_-FV	6957-	430B-_-FU	22
NPT (M) Adapter	6860-	430MA-_-FV	6960-	430MA-_-FU	25
NPT (F) Adapter	6863-	430FA-_-FV	6963-	430FA-_-FU	25
Plugs	6865-	430SP-_-FV	6965-	430SP-_-FU	26

CLASS 150 FFW NAVY FLANGE Page 29			
BEC P/N (90/10)	BEC P/N (70/30)	LEE BRASS P/N (90/10)	LEE BRASS P/N (70/30)
319214(SW)-FV	319121(SW)-FU	6875LB-100	6975LB-100
319125(SW)-FV	319122(SW)-FU	6875LB-150	6975LB-150
319126(SW)-FV	319123(SW)-FU	6875LB-200	6975LB-200
319119(SW)-FV	319117(SW)-FU	6875LB-250	6975LB-250
319120(SW)-FV	319118(SW)-FU	6875LB-300	6975LB-300
319032(SW)-FV	319021(SW)-FU	6875LB-400	6975LB-400
319033(SW)-FV	319022(SW)-FU	6875LB-450	6975LB-450
319034(SW)-FV	319023(SW)-FU	6875LB-500	6975LB-500
319035(SW)-FV	319024(SW)-FU	6875LB-550	6975LB-550
319036(SW)-FV	319025(SW)-FU	6875LB-600	6975LB-600
319037(SW)-FV	319026(SW)-FU	6875LB-650	6975LB-650
319038(SW)-FV	319027(SW)-FU	6875LB-700	6975LB-700
319039(SW)-FV	319028(SW)-FU	6875LB-750	6975LB-750
319040(SW)-FV	319029(SW)-FU	6875LB-800	6975LB-800
319041(SW)-FV	319030(SW)-FU	6875LB-820	6975LB-820

CLASS 150 FFW NAVY SLIP-ON Page 30			
BEC P/N (90/10)	BEC P/N (70/30)	LEE BRASS P/N (90/10)	LEE BRASS P/N (70/30)
319124(SO)-FV	319121(SO)-FU	6880LB-100	6980LB-100
319125(SO)-FV	319122(SO)-FU	6880LB-150	6980LB-150
319126(SO)-FV	319123(SO)-FU	6880LB-200	6980LB-200
319119(SO)-FV	319117(SO)-FU	6880LB-250	6980LB-250
319120(SO)-FV	319118(SO)-FU	6880LB-300	6980LB-300
319032(SO)-FV	319021(SO)-FU	6880LB-400	6980LB-400
319033(SO)-FV	319022(SO)-FU	6880LB-450	6980LB-450
319034(SO)-FV	319023(SO)-FU	6880LB-500	6980LB-500
319035(SO)-FV	319024(SO)-FU	6880LB-550	6980LB-550
319036(SO)-FV	319025(SO)-FU	6880LB-600	6980LB-600
319037(SO)-FV	319026(SO)-FU	6880LB-650	6980LB-650
319038(SO)-FV	319027(SO)-FU	6880LB-700	6980LB-700
319039(SO)-FV	319028(SO)-FU	6880LB-750	6980LB-750
319040(SO)-FV	319029(SO)-FU	6880LB-800	6980LB-800
319041(SO)-FV	319030(SO)-FU	6880LB-820	6980LB-820

CLASS 200 FFW NAVY FLANGE Page 31			
BEC P/N (90/10)	BEC P/N (70/30)	LEE BRASS P/N (90/10)	LEE BRASS P/N (70/30)
319011(SW)-FV	319001(SW)-FU	6888LB-400	6988LB-400
319012(SW)-FV	319002(SW)-FU	6888LB-450	6988LB-450
319013(SW)-FV	319003(SW)-FU	6888LB-500	6988LB-500
319014(SW)-FV	319004(SW)-FU	6888LB-550	6988LB-550
319015(SW)-FV	319005(SW)-FU	6888LB-600	6988LB-600
319016(SW)-FV	319006(SW)-FU	6888LB-650	6988LB-650
319017(SW)-FV	319007(SW)-FU	6888LB-700	6988LB-700
319018(SW)-FV	319008(SW)-FU	6888LB-750	6988LB-750
319019(SW)-FV	319009(SW)-FU	6888LB-800	6988LB-800
319020(SW)-FV	319010(SW)-FU	6888LB-820	6988LB-820
319072(SW)-FV	319071(SW)-FU	NOT AVAILABLE	NOT AVAILABLE

CLASS 250 FFW NAVY SLIP-ON Page 32			
BEC P/N (90/10)	BEC P/N (70/30)	LEE BRASS P/N (90/10)	LEE BRASS P/N (70/30)
319136(SW)-FV	319131(SW)-FU	6881LB-100	6981LB-100
319137(SW)-FV	319132(SW)-FU	6881LB-150	6981LB-150
319138(SW)-FV	319133(SW)-FU	6881LB-200	6981LB-200
319139(SW)-FV	319134(SW)-FU	6881LB-250	6981LB-250
319140(SW)-FV	319135(SW)-FU	6881LB-300	6981LB-300
319054(SW)-FV	319043(SW)-FU	6881LB-400	6981LB-400
319055(SW)-FV	319044(SW)-FU	6881LB-450	6981LB-450
319056(SW)-FV	319045(SW)-FU	6881LB-500	6981LB-500
319057(SW)-FV	319046(SW)-FU	6881LB-550	6981LB-550
319058(SW)-FV	319047(SW)-FU	6881LB-600	6981LB-600
319059(SW)-FV	319048(SW)-FU	6881LB-650	6981LB-650
319060(SW)-FV	319049(SW)-FU	6881LB-700	6981LB-700
319061(SW)-FV	319050(SW)-FU	6881LB-750	6981LB-750
319062(SW)-FV	319051(SW)-FU	6881LB-800	6981LB-800
319063(SW)-FV	319052(SW)-FU	6881LB-820	6981LB-820

CLASS 400 FFW NAVY FLANGE PAGE 33			
BEC P/N (90/10)	BEC P/N (70/30)	LEE BRASS P/N (90/10)	LEE BRASS P/N (70/30)
319157(SW)-FV	319141(SW)	6878LB-040	6978LB-040
319158(SW)-FV	319142(SW)	6878LB-060	6978LB-060
319159(SW)-FV	319143(SW)	6878LB-100	6978LB-100
319160(SW)-FV	319144(SW)	6878LB-150	6978LB-150
319161(SW)-FV	319145(SW)	6878LB-200	6978LB-200
319162(SW)-FV	319146(SW)	6878LB-250	6978LB-250
319163(SW)-FV	319147(SW)	6878LB-300	6978LB-300
319164(SW)-FV	319148(SW)	6878LB-400	6978LB-400
319165(SW)-FV	319149(SW)	6878LN-450	6978LB-450
319166(SW)-FV	319150(SW)	6878LB-500	6978LB-500
319167(SW)-FV	319151(SW)	6878LB-550	6978LB-550
319168(SW)-FV	319152(SW)	6878LB-600	6978LB-600
319169(SW)-FV	319153(SW)	6878LB-650	6978LB-650
319170(SW)-FV	319154(SW)	6878LB-700	6978LB-700
319171(SW)-FV	319155(SW)	6878LB-750	6978LB-750
319172(SW)-FV	319156(SW)	6878LB-800	6978LB-800

BEC MACHINE PRODUCTS

100 CHRISTOPHER LANE
HARLEYSVILLE, PA 19438 USA
PHONE: (215) 256-3100
FAX: (215) 256-3108
EMAIL: INFO@BECMACHINE.COM

VISIT US ONLINE

DOWNLOAD THIS CATALOG HERE

ALL PRODUCTS MANUFACTURED IN THE U.S.A.